SWEEPSTER

QC Series

211 Model

Hydraulic Windrow Sweepers for Loaders

BRADCO
FFC
HARLEY
THE MAJOR
McMILLEN
SWEEPSTER
PALADIN LIGHT CONSTRUCTION

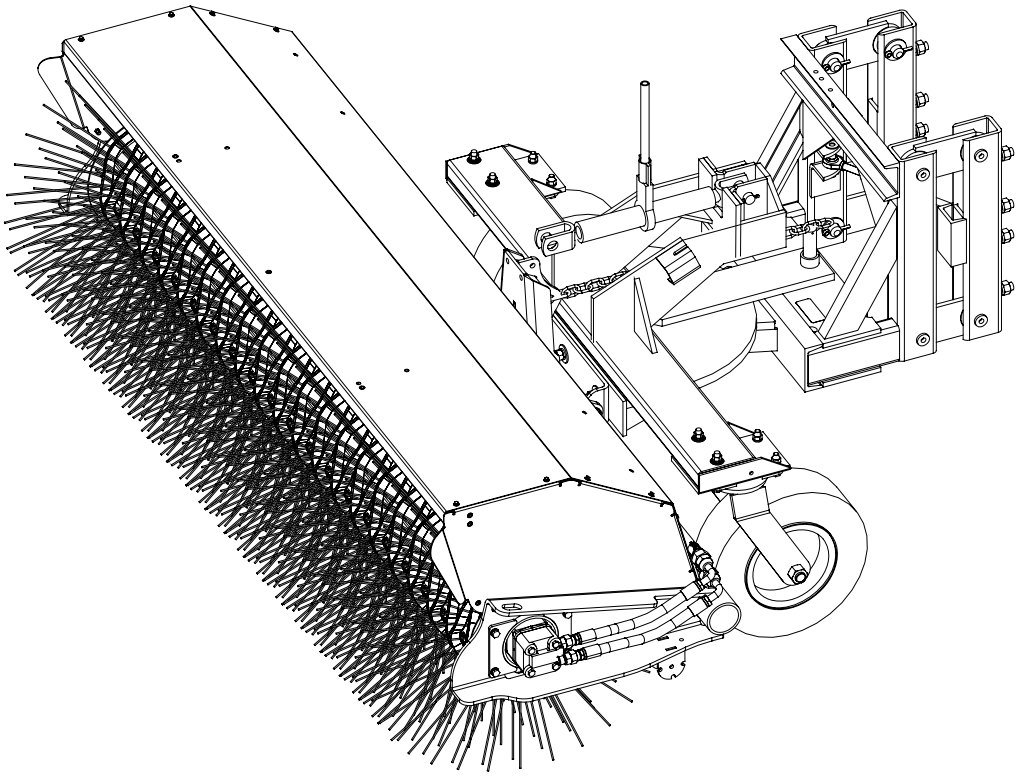

Sweepster Serial Number_____

Manual Number: 51-3913
Release Date: October 2006
Serial Number 0640001 and Up

800-456-7100 www.paladinbrands.com Sweepster 2800 N. Zeeb Rd., Dexter, MI 48130 United States of America

Table of Contents

Installation Manual

QC Series Angle Brooms

Table of Contents

Introduction

Importance of this Manual

Read this manual before attempting to operate the equipment.

This operator's manual should be regarded as part of the sweeper. Suppliers of both new and secondhand sweepers are advised to keep documentation indicating that this manual was provided with the sweeper.

The manual contains information regarding installation, operation and maintenance required for this sweeper and optional equipment. It also includes detailed parts lists.

Purpose of Sweeper

This sweeper is designed solely for use in construction cleanup, road maintenance, grounds maintenance and similar operations. Use in any other way is considered contrary to the intended use. Compliance with and strict adherence to operation, service and repair conditions, as specified by the manufacturer, are also essential elements of the intended use.

This sweeper should be operated, serviced and repaired only by persons who are familiar with its characteristics and acquainted with relevant safety procedures.

Accident prevention regulations, all other generally recognized safety regulations and all road traffic regulations must be observed at all times.

Any modifications made to this sweeper may relieve the manufacturer of liability for any resulting damage or injury.

Safety Alert Symbol

This safety alert symbol indicates important safety messages in this manual. When you see this symbol, be alert to the possibility of injury. Carefully read the message that follows and inform other operators.

Contacting SWEEPSTER

If you have any questions about information in this manual or need to order parts, please call, write, fax or e-mail SWEEPSTER.

SWEEPSTER
2800 North Zeeb Road
Dexter, Michigan 48130
Phone: (734) 996-9116 - (800) 456-7100
FAX: (734) 996-9014
e-mail: sweepster@paladinbrands.com

For help with installation, operation or maintenance procedures, contact our Technical Service Department. Direct product questions and parts orders to our Sales Department.

When ordering parts or accessories, be prepared to give the following information:

- Sweeper model, serial number and date of purchase
- Prime mover, make and model
- Part number, description and quantity

Terms Used in Manual

Right-hand, left-hand, front and *rear* are determined from the operator's perspective (either the operator's seat or standing behind a walk-behind unit), facing forward in the normal operating position.

Prime mover refers to the tractor, truck, loader or tow vehicle that the sweeper is mounted on or towed by.

Optional Equipment

Installation instructions for optional equipment, if applicable, appear in the Service Manual Section.

Specifications & Features

Due to continuous product improvement, specifications and features may change without notice.

Warranty

To validate the warranty for this unit, fill out the warranty card or warranty pages located at the back of this manual. Then, send this information to SWEEPSTER.

Safety Information

Read this manual

Read all safety information in this manual. All operators must read and understand the entire contents of this manual before sweeping. General safety practices are listed on Safety Information pages and specific safety information is located throughout this manual.

Hazard Definitions

Four hazard classifications are used in this manual. They are

DANGER - Indicates an imminently hazardous situation which, if not avoided, will result in death or serious injury.

WARNING - Indicates a potentially hazardous situation which, if not avoided, could result in death or serious injury.

CAUTION - Indicates a potentially hazardous situation which, if not avoided, may result in minor or moderate injury.

CAUTION - Used for instructions when machine damage may be involved.

Operation

CAUTION - A sweeper is a demanding machine. Only fully trained operators or trainee operators under the close supervision of a fully trained person should use this machine.

Before operating sweeper:

- Learn sweeper and prime mover controls in an off-road location.
- Be sure that you are in a safe area, away from traffic or other hazards.
- Check all hardware holding the sweeper to the prime mover, making sure it is tight.
- Replace any damaged or fatigued hardware with properly rated fasteners. See Maintenance Section
- Make sure all hydraulic hardware and hydraulic fittings are tight.
- Replace any damaged or fatigued fittings or hoses.
- Check prime mover tire pressure before sweeping.
- Check tire ratings to be sure they match the prime mover load. Weigh the sweeper end of the prime mover, if necessary, to insure proper tire rating.
- Remove from the sweeping area all property that could be damaged by flying debris.
- Be sure all persons not operating the sweeper are clear of the sweeper discharge area.
- Always wear proper apparel such as a long-sleeved shirt buttoned at the cuffs; safety glasses, goggles or a face shield; ear protection; and a dust mask.

While operating sweeper:

- When operating sweeper, adhere to all government rules, local laws and other professional guidelines for your sweeping application.

WARNING - Never raise the sweeper more than a few feet off the ground. The sweeper can tip back or the prime mover can tip over causing death or serious injury,

- Before leaving the operator's area for any reason, lower the sweeper to the ground. Stop the prime mover engine, set the parking brake and remove the key from the ignition.
- Minimize flying debris - use the slowest rotating speed that will do the job. See Operation Section: Operating Tips
- Keep hands, feet, hair and loose clothing away from all moving parts.
- Leave the brush hood (shield) and all other shields and safety equipment in place when operating the sweeper and prime mover.
- Be aware of the extra weight and width a sweeper adds. Reduce travel speed accordingly. See Product Information Section: Operating the Sweeper.
- When sweeping on rough terrain, reduce speed to avoid "bouncing" the sweeper. Loss of steering can result.
- Never sweep toward people, buildings, vehicles or other objects that can be damaged by flying debris.
- Only operate the sweeper while you are in the operating position. The safety restraint must be fastened while you operate the prime mover. Only operate the controls while the engine is running. Protective glasses must be worn while you operate the prime mover and while you operate the sweeper.
- While you operate the sweeper slowly in an open area, check for proper operation of all controls and all protective devices. Note any needed repairs during operation of the sweeper. Report any needed repairs.

Service & Repair - General

CAUTION - Do not modify the sweeper in any way. Personal injury could result. If you have questions, contact your dealer or SWEEPSTER.

Repair or adjust the sweeper in a safe area, away from traffic and other hazards.

Before adjusting or servicing - lower the sweeper to the ground, set parking brake, shut down the prime mover and remove the key from the ignition.

When working on or around the sweeper, safely secure it from falling or shifting.

Service & Repair - Hydraulic Safety

Stop the prime mover engine and release hydraulic pressure before servicing or adjusting sweeper hydraulic systems.

WARNING - Escaping hydraulic fluid can have enough pressure to penetrate the skin, causing serious personal injury.

Check lines, tubes and hoses carefully. Do not use your hand to check for leaks. Use a board or cardboard to check for leaks. Tighten all connections to the recommended torque. See Appendix.

Do not bend high pressure lines. Do not strike high pressure lines, Do not install bent lines, bent tubes, or kinked hoses. Do not install damaged lines, damaged tubes, or damaged hoses.

Repair loose lines, loose tubes, and loose hoses. Repair damaged lines, damaged tubes, and damaged hoses. Leaks can cause fires. See your SWEEPSTER dealer for repair or replacement parts.

Replace the parts if any of the following conditions are present:

•The end fittings are damaged or leaking.

•The outer covering is chafed or cut.

•The reinforcing wire layer is exposed.

•The outer covering is ballooning locally.

•The hose is kinked or crushed.

•The hoses have been pulled or stretched.

Make sure that all clamps, guards, and shields are installed correctly.

Notes

Safety Signs and Labels

There are several specific safety signs on this sweeper. The exact location of the hazards and the description of the hazards are reviewed in this section.

Placement or Replacement of Safety Signs

1. Clean the area of application with nonflammable solvent, and then wash the same area with soap and water.
2. Allow the surface to fully dry.
3. Remove the backing from the safety sign, exposing the adhesive surface.
4. Apply the safety sign to the position shown in the diagram above and smooth out any bubbles.

Instructions

- Keep all safety signs clean and legible.
- Replace all missing, illegible, or damaged safety signs.
- Replacement parts, for parts with safety signs attached, must also have safety signs attached.
- Safety signs are available, free of charge, from your dealer or from SWEEPSTER.

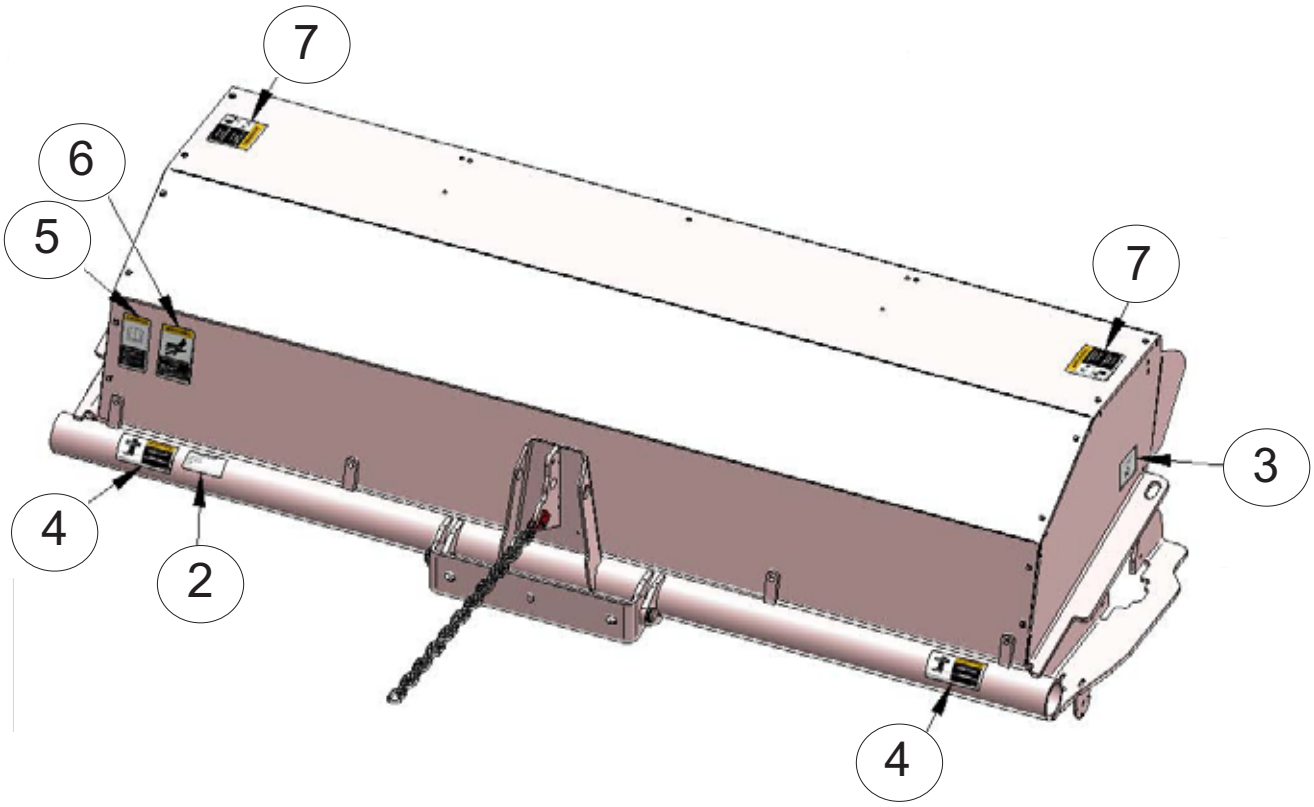

Item	Part	Qty	Description
2.	50-0634	1	Label, Serial Number
3.	50-0643	2	Label, Tie Down Point
4.	50-0721	2	Label, Warning, Crush Hazard
5.	50-0722	1	Label, Warning, Misuse Hazard
6.	50-0724	1	Label, Warning, High Pressure Fluid Hazard
7.	50-0726	2	Label, Warning, Flying Objects & Entanglement

Safety Signs and Labels

2. 50-0634

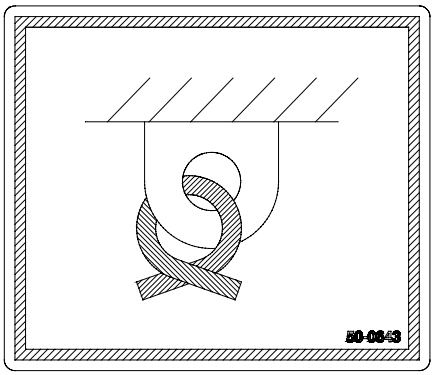

3. 50-0643

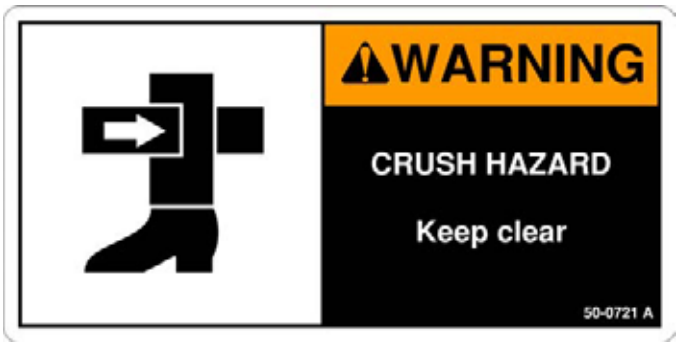

4. 50-0721

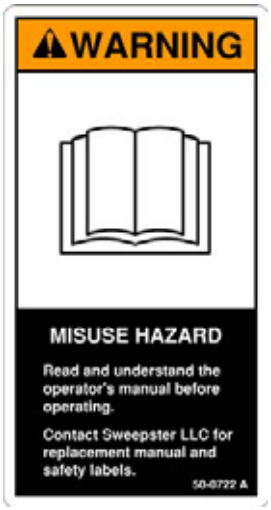

5. 50-0722

6. 50-0724

7. 50-0726

Product Information Section

Specifications and Model Views

Maximum Width at 0° Articulation

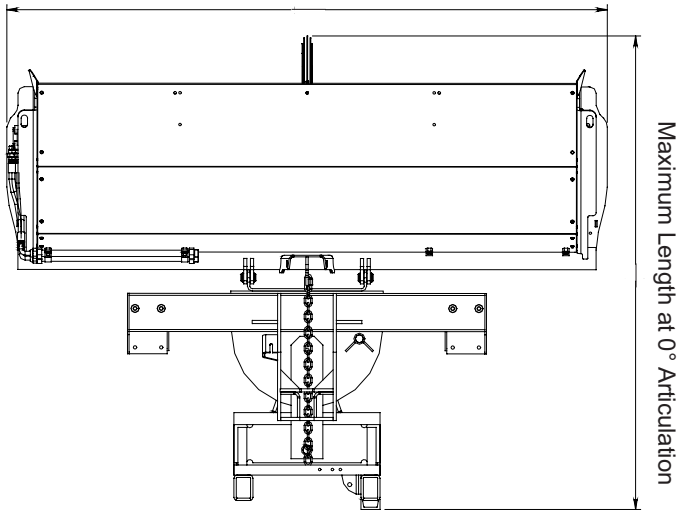

QC Brush Head			
Approximate Weight with Mounting/Swing (Hook Set Not Included)	Single Motor	Dual Motor	
	1372 lbs	1412 lbs	8 Ft
	1443 lbs	1483 lbs	9 Ft
Maximum Length at 0° Articulation	74.5 inches		
Maximum Width at 0° Articulation	106.5 inches	8 Ft	
	118.5 inches	9 Ft	
Maximum Length at Full Articulation	89 inches	8 Ft	
	92.5 inches	9 Ft	
Maximum Width at Full Articulation	103 inches	8 Ft	
	113 inches	9 Ft	
Sweeping Width at 0° Articulation	96 inches	8 Ft	
	108 inches	9 Ft	
Sweeping Width at Full Articulation	85 inches	8 Ft	
	96 inches	9 Ft	

Maximum Width at Full Articulation

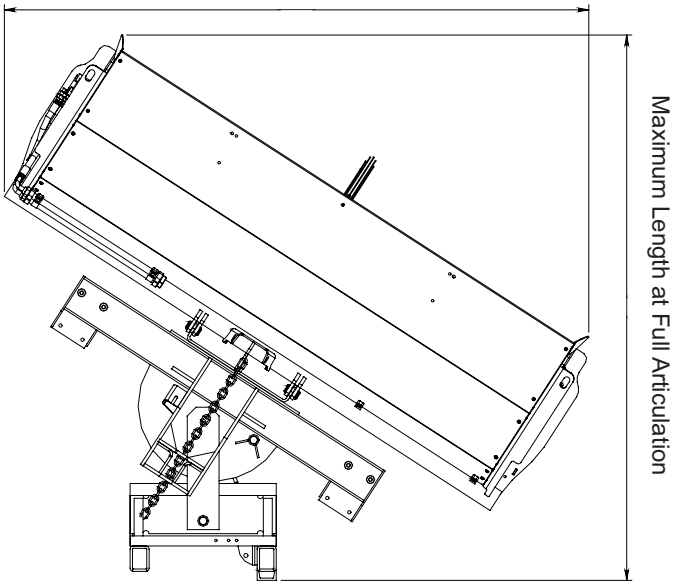

Range of Hydraulic Oil Flow		
Single Motor	25 cubic inch	12-25
Dual Motor	18 cubic inch	18-36
Maximum Hydraulic Oil Pressure		
Single Motor	25 cubic inch	3000 psi
Dual Motor	18 cubic inch	3500 psi

Sweeper Installation (Broom to Prime Mover)

WARNING - Improper attachment of sweeper could result in injury or death. Do not operate this machine until you have positive indication that the attachment is securely mounted.

1. Position the broom on a level surface.
2. Enter the prime mover.
3. Fasten the safety restraints.
4. Start the engine.
5. Disengage the parking brake.
6. Align the attachment mechanism with the mounting on the broom, attach to the prime mover. Follow the attaching procedure in the prime mover owners manual.
7. Engage the parking brake and shut down the prime mover. Be sure to relieve pressure to the auxiliary hydraulic lines.
8. Unfasten safety restraints and exit the prime mover.
9. Ensure that the hydraulic quick couplers are clean. Connect hydraulic lines for the broom to the prime mover. Twist the collar of the quick couplers one quarter of a turn in order to secure the hydraulic connections.
10. While the loader arms are lowered, visually inspect the attachment mechanism to ensure that it is securely mounted.
11. Carefully raise the loader and cycle the rollback/dump cylinders to check clearances, that limiting stops make proper contact and verify that all mounting procedures have been successfully completed. Contact SWEEPSTER for instructions if the limiting stops do not contact properly.

WARNING - Improper attachment of sweeper could result in injury or death. Do not operate this machine until you have positive indication that the attachment is securely mounted.

Removing the Sweeper

WARNING - Serious injury or death may result from disengaging the sweeper when the sweeper is in an unstable position or carrying a load. Place the sweeper in a stable position before disengaging.

CAUTION - Hoses for the sweepers must be removed before the quick attach is disengaged. Pulling the sweeper with the hoses could result in damage to the prime mover or the sweeper.

1. Lower the broom to the ground.
2. Engage the parking brake and shut down the prime mover. Be sure to relieve pressure to the auxiliary hydraulic lines.
3. Unfasten safety restraints and exit prime mover.
4. Disconnect the broom hydraulic lines from the prime mover. Connect quick couplers together to keep clean.
5. Disengage attachment locking mechanism. (mechanical type)
6. Enter prime mover, fasten safety restraints and start the prime mover.
7. Disengage attachment mechanism. (hydraulic type)
8. Disengage the parking brake, and back away from the broom.

Storage

CAUTION - Do not store the sweeper with weight on the brush. Weight will deform the bristles, destroying the sweeping effectiveness. To avoid this problem, place the sweeper on blocks or use storage stands.

Do not store polypropylene brushes in direct sunlight. The material can deteriorate and crumble before the bristles are worn out.

Keep polypropylene brush material away from intense heat or flame.

Notes

Operation and Maintenance Manual

QC Series Angle Brooms

Table of Contents

Before Each Use

Perform daily maintenance as indicated in Maintenance Schedule.

Run the prime mover and sweeper at a slow idle. Check for hydraulic leaks or other problems and make corrections, if necessary, before using the sweeper. See “Hydraulic inspection guideline” .

WARNING - Avoid serious injury. Check for large objects that could harm the operator or others if thrown by the sweeper. Remove these items before operating.

During Use

Directing Debris

Carry the sweeper low to the ground so that the operator has good visibility and stability. Avoid any sudden movements.

Avoid excessive downward pressure on the brush sections to prevent excessive wear. A two to four inch wide pattern is sufficient for most applications. Ensure that the adjustment bolts are equally adjusted in order to prevent an uneven wear pattern. To adjust brush pattern see “Adjusting Brush Pattern”.

Direct debris by angling the brush head in that direction.

Observe wind direction. Sweeping with the wind makes sweeping more effective and helps keep debris off the operator.

The terms *swing* and *angle* are used interchangeably.

Manual Angle

1. Remove the lock pin from links.
2. Position the brush head at the desired angle, aligning holes in the inner and outer link.
3. Insert and close the lock pin.

Hydraulic Angle

1. Start the prime mover.
2. Position the brush head at the desired angle by using the valve control for the swing function.

Sweeping

To sweep:

1. Manual angle only - Swing the brush head assembly the direction that you want to direct debris.
2. Start the prime mover at idle and raise the brush.
3. Hydraulic angle only - Swing the brush head assembly the direction that you want to direct debris.
4. Engage the brush and then lower it to the ground.
5. Increase prime mover engine rpm to sweeping speed.
6. Travel forward at 5 mph (8 kph) or less.

CAUTION - Avoid sweeper damage. Reduce travel speed to avoid hitting immovable objects.

Operating Tips

CAUTION - Avoid sweeper damage. Do not ram into piles. Use an appropriate attachment for this type of job.

Brush, Engine & Travel Speeds

Vary brush, engine and travel speeds to match sweeping conditions.

Large Areas

When sweeping a large area, such as a parking lot, make a path down the middle and sweep to both sides. This reduces the amount of debris that the sweeper must sweep to one side.

Snow

Fast brush speeds and slow travel speeds are needed to sweep snow effectively. Start at 3/4 throttle and the lowest gear of the prime mover. For wet and /or deep snow, increase to almost full throttle. This helps keep snow from packing up inside the brush hood.

In deep snow you may need to make multiple passes to get down to a clean surface.

To keep snow from blowing back onto a swept area, always sweep so the wind is at your back.

Dirt & Gravel

To keep dust at a minimum, use the optional dust suppression kit or plan sweeping for days when it is overcast and humid or after it has rained. Also, sweep so the wind blows at your back.

Low brush speeds and moderate travel speeds work best for cleaning debris from hard surfaces. Brush speeds that are too fast tend to raise dust because of the aggressive sweeper action.

To sweep gravel, use just enough brush speed to “roll” the gravel, not throw it.

Heavy Debris

Travel slowly - 2-3 mph. (3-5 kph)

Sweep a path less than the full width of the sweeper.

Increase engine speed if debris becomes very heavy.

Aligning Mounting

The mounting incorporates a four-bar linkage system that allows the sweeper to move up an d down independently of the loader arms. This feature is very important because it permits the sweeper to follow the contours of the ground, offering a good sweep.

CAUTION - Adjust the four-bar linkage before each operation to avoid sweeper damage.

Sweeping with a properly adjusted mounting offers efficient performance, while using the mounting out of adjustment can cause severe damage to the sweeper and can result in a poor sweep. If the U-channels on the loader arms are positioned too low, the sweeper must support the loader arms, an amount of weight far greater than the sweeper is designed to carry. If the U-channels on the loader arms are too high, the sweeper cannot sweep into the low areas.

To adjust the mounting:

1. Drive the loader and sweeper to a flat surface.
2. Lower the sweeper so the casters sit on the ground.
3. Adjust the loader arms so the tops of the U-channels on the sweeper and the tops of the U-channels on the loader arms are even (figure 1).
4. Adjust the brush height according to Setting Brush Pattern.

Leveling

Level the sweeper for even brush wear and effective use.

CAUTION - Avoid injury. Before adjusting the sweeper, always turn off the sweeper and the prime mover engine and remove the key.

1. Move the sweeper to a flat, paved surface.
2. Lower the brush head assembly to the ground.
3. Position the brush head assembly straight ahead.
4. Engage the parking brake and shut down the prime mover. Be sure to relieve pressure to the auxiliary hydraulic lines.
5. Unfasten safety restraints and exit prime mover.
6. On each side, measure from the brush frame to the ground (figure 2). If measurements are not equal:

   Loosen hardware that attaches the swing assembly to the brush head assembly; lower the high side of the brush head until both sides are an equal distance above the ground. Tighten the hardware. (figure 3)

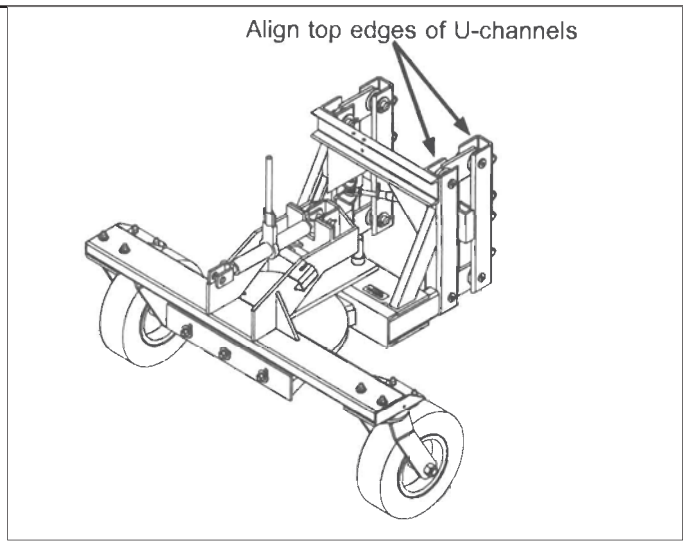

figure 1

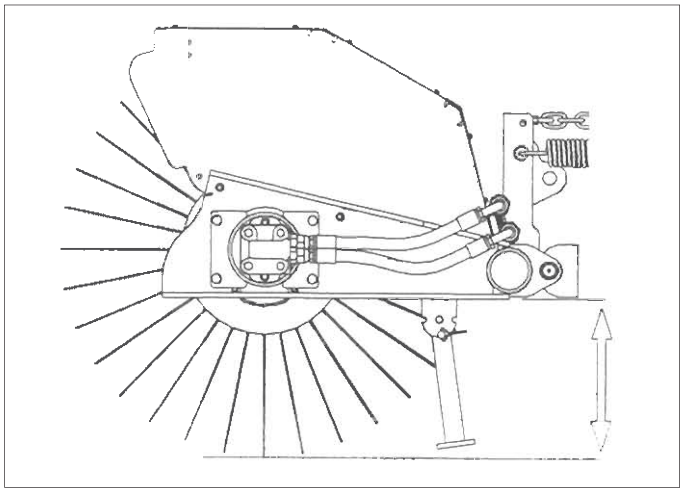

figure 2

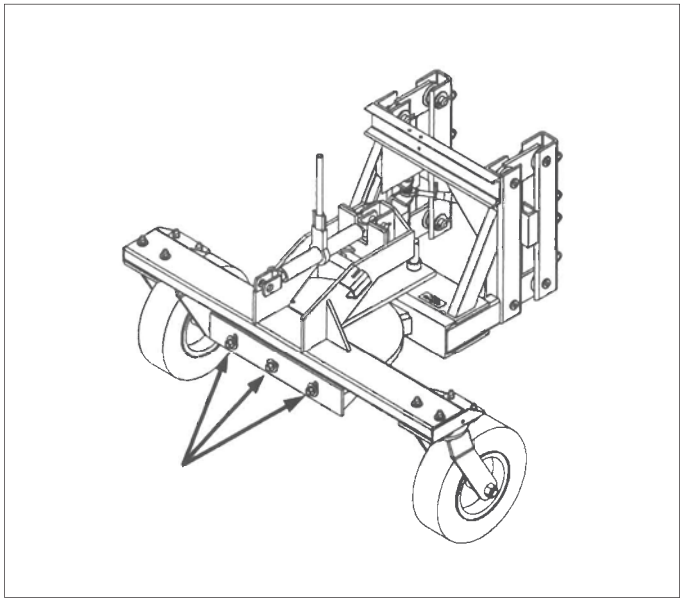

figure 3

Setting Brush Pattern

A properly adjusted brush offers the best sweeper performance. To check the brush pattern:

1. Move the sweeper to a dusty, flat surface.
2. Engage the parking brake and shut down the prime mover. Be sure to relieve pressure to the auxiliary hydraulic lines.
3. Ratchet the brush head down until the bristles touch the ground.
4. Start the sweeper at a slow speed. Run the sweeper in a stationary position for 10 seconds.
5. Raise the sweeper and back away; switch off the engine and remove the key. The brush pattern left in the dust should be 2-4 inches (51-102 mm) wide, running the length of the brush. (Compare the swept area with figure 7.)
6. Adjust the brush pattern as necessary using the adjusting ratchet.

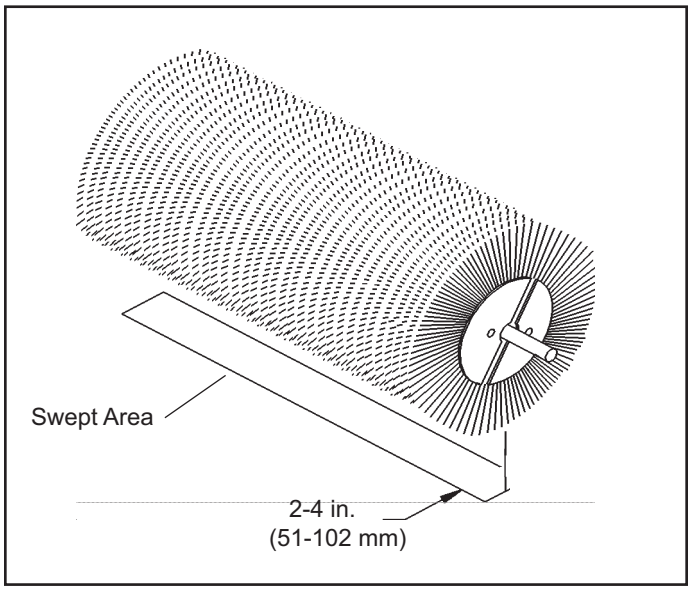

Figure 7

Maintenance Schedule

Procedure	Before Each Use	After Each Use	100 Hours	500 Hours	See Prime Mover
Brush head assembly - Level	✓				
Brush pattern - Check (See Pattern Adj. Section)	✓				
Cylinders - Retract rods		✓			
- Grease threaded and ball ends to prevent rust		✓			
Filter, air, prime mover - Clean					✓
Fittings/hoses, hydraulic - Check for leaks/tighten Check for damage	✓				
Fittings, zerk - Grease. (See lubrication points)	✓				
Oil, hydraulic - Check Level	✓				
Hardware - Check for tightness	✓				

Maintenance Record

Use this log to record maintenance performed on the sweeper.

Date	Maintenance Procedure Performed	Performed By	Comments

Replacing Brush Sections

1. Remove motor mount screws. Retain hardware for reinstallation. Remove motor mount.

2. Remove bearing mounting plate screws from side . Retain hardware for reinstallation.

3. Remove core from brush head assembly.

4. Remove retaining plate from core assembly.

5. Remove old sections.

6. Install new sections by doing the following:

   a. Number the tubes on the core as 1, 2 and 3 (figure 8).

   b. Slide the first section onto the core with the drive pins on either side of tube 1. Make sure that the drive pins angle up (figure 8).

   c. Place the second section on the core with the drive pins on either side of tube 2. Be sure the drive pins angle down (figure 9).

   d. Put the third section on with the drive pins around tube 3. Be sure the drive pins angle up.

   e. Slide sections on until the core is full, making sure to alternate the tubes used and the direction of the drive pins.

7. Reattach the section retainer and bearing mounting plate with previously removed hardware.

8. Lay core on ground. Lower frame over core.

9. Reattach bearing mounting plate with previously removed hardware.

10. Reattach motor mount with hardware removed in first step.

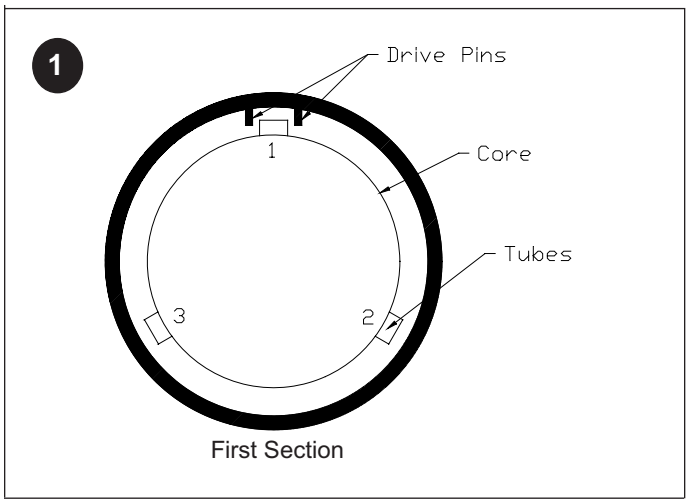

figure 8

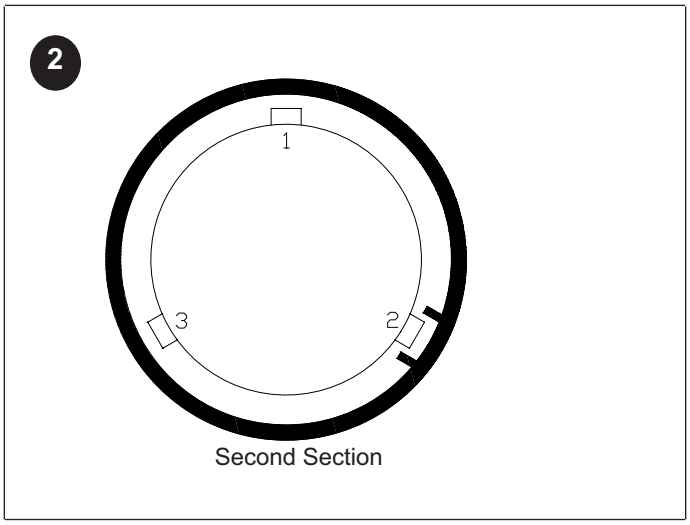

figure 9

Lubrication Points

The following grease fittings should be greased before each use. See figure for locations.

1. Core bearing (1 fitting)
2. Brush Head Pivot (2 fitting)

Not Shown:
Hydraulic Angle Cylinder (2 fittings)
Caster Assembly (2 fittings)
Parallel Link Pins (8)

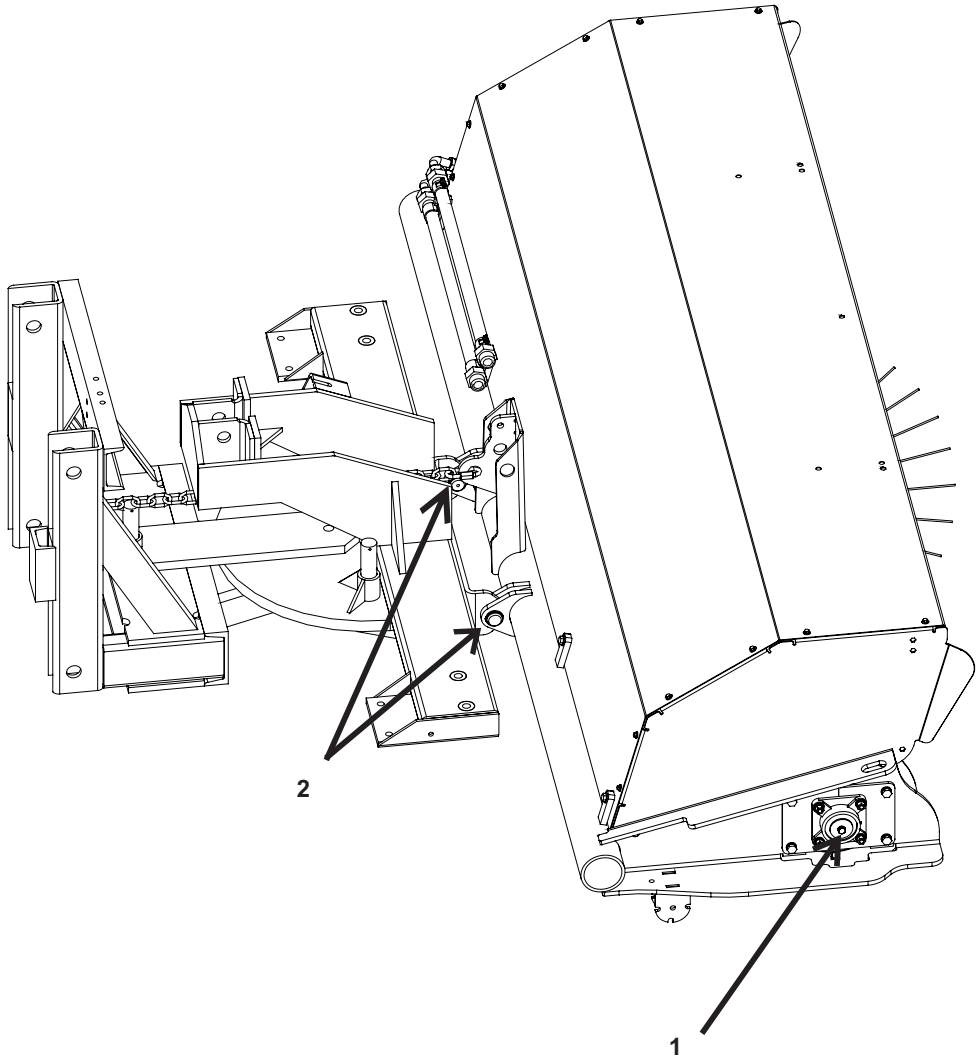

Service Manual

QC Series Angle Brooms

Table of Contents

Brush Head

Problem	Possible Cause	Possible Solution
Brush rotates wrong direction	Hoses installed incorrectly	Switch hoses at brush head tubes
Brush slows or stops when sweeping	Brush pattern too wide	Adjust brush pattern to 2-3 inches (51-76mm) wide: see Maintenance: Adjusting Brush Pattern
	Travel speed too fast	Travel no more than 5 mph (8 kph) while sweeping (2-3 mph recommended)
	Trying to sweep too much material at once	Make several passes with sweeper
	Relief pressure set too low	Set relief pressure to 2000 psi (138.0 bars)
	Filter plugging	Change or clean filter
Brush wears into cone shape	Tires on prime mover at different pressures or are different sizes	Check tire sizes and ratings: make corrections as necessary
Brush wears very quickly	Brush pattern too wide	Adjust brush pattern to 2-3 inches (51-76mm) wide: see Maintenance: Setting Brush Pattern

Hydraulic Cylinders - Lift & Swing

Problem	Possible Cause	Possible Solution
Hydraulic cylinder neither extends nor retracts	Manual valve - Control rods not connected or are binding	Check control rod linkage; make sure all parts are connected and are not binding; fix if necessary
	Electric valve - Set screw in flow divider on manifold too tight	Loosen jam nut and then turn set screw in until it stops; turn set screw out 1 1/2 turns; tighten jam nut
	Electric valve - No power from controls because wires are broken or disconnected	Reconnect wires if disconnected; replace wires if broken
	Electric valve - No power from controls because switch is broken	Replace switch
	Both types of valves - Hydraulic oil level too low	Fill tank to 2-3 inches (51-76mm) from top of tank with ISO VG-46 oil
	Both types of valves - Hoses or fittings loose or disconnected	Tighten hoses and fittings
	Both types of valves - Restriction in hoses	Remove bends in hoses, remove obstructions inside hoses
Hydraulic cylinder only extends or only retracts	Electric valve - Set screw in flow divider on manifold out of adjustment	Loosen jam nut and then turn set screw in until it stops; turn set screw out 1 1/2 turns; tighten jam nut
	Electric valve - Dirt or debris in spools	Contact Sweepster Technical Service
Hydraulic cylinder extends or retracts too quickly	Manual valve - Flow too high because restrictor fitting missing from cylinder	Reinstall restrictor fitting on barrel end of cylinder
	Manual valve - Flow too high even though restrictor fitting is installed	Contact Sweepster for smaller orifice fitting
	Electric valve - Set screw in flow divider on manifold too loose	Loosen jam nut and then turn set screw in until it stops; turn set screw out 1 1/2 turns; tighten jam nut

Hydraulic System

Problem	Possible Cause	Possible Solution
Hydraulic system overheats	Hydraulic oil level too low	Add hydraulic oil to tank until it comes to 2 inches (51mm) from top
	Restriction in hoses	Remove bends in hoses; remove obstructions inside hoses
	Host pump flow rate exceeds maximum rate of broom	Contact host manufacturer for proper flow control method
Hydraulic motor seals leak	Back pressure exceeds 1000psi	Contact Sweepster
	Motor is failing	High number of hours on motor; Contact dealer to rebuild or replace

Motor Port Identification

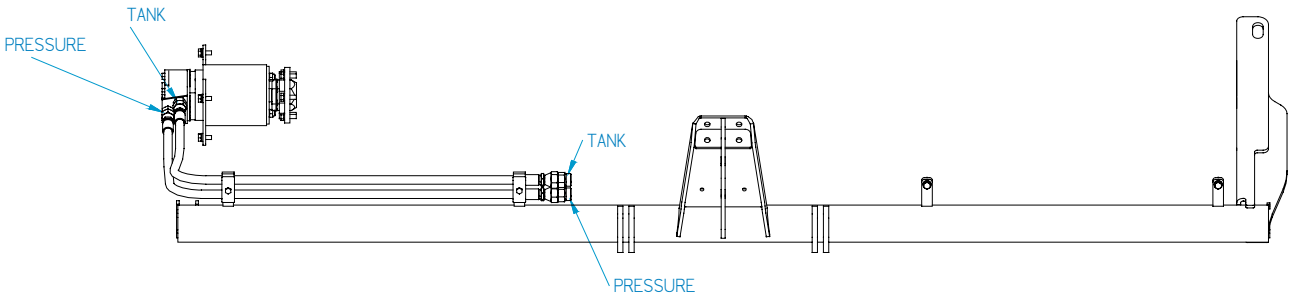

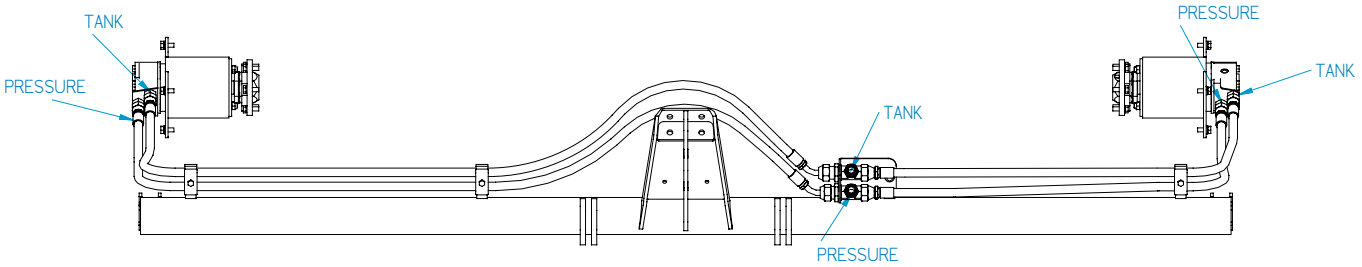

Notes

Parts Manual

QC Series Angle Brooms

Table of Contents

21196MH-XXXX	8 FT	QC, 32”, Single 24 ci, Hydraulic Angle Broom
21196MM-XXXX	8 FT	QC, 32”, Single 24 ci, Manual Angle Broom
21197MH-XXXX	8 FT	QC, 32”, Dual 18 ci, Hydraulic Angle Broom
21197MM-XXXX	8 FT	QC, 32”, Dual 18 ci, Manual Angle Broom

21108MH-XXXX	9 FT	QC, 32”, Single 24 ci, Hydraulic Angle Broom
21108MM-XXXX	9 FT	QC, 32”, Single 24 ci, Manual Angle Broom
21109MH-XXXX	9 FT	QC, 32”, Dual 18 ci, Hydraulic Angle Broom
21109MM-XXXX	9 FT	QC, 32”, Dual 18 ci, Manual Angle Broom

Brush Head Frames

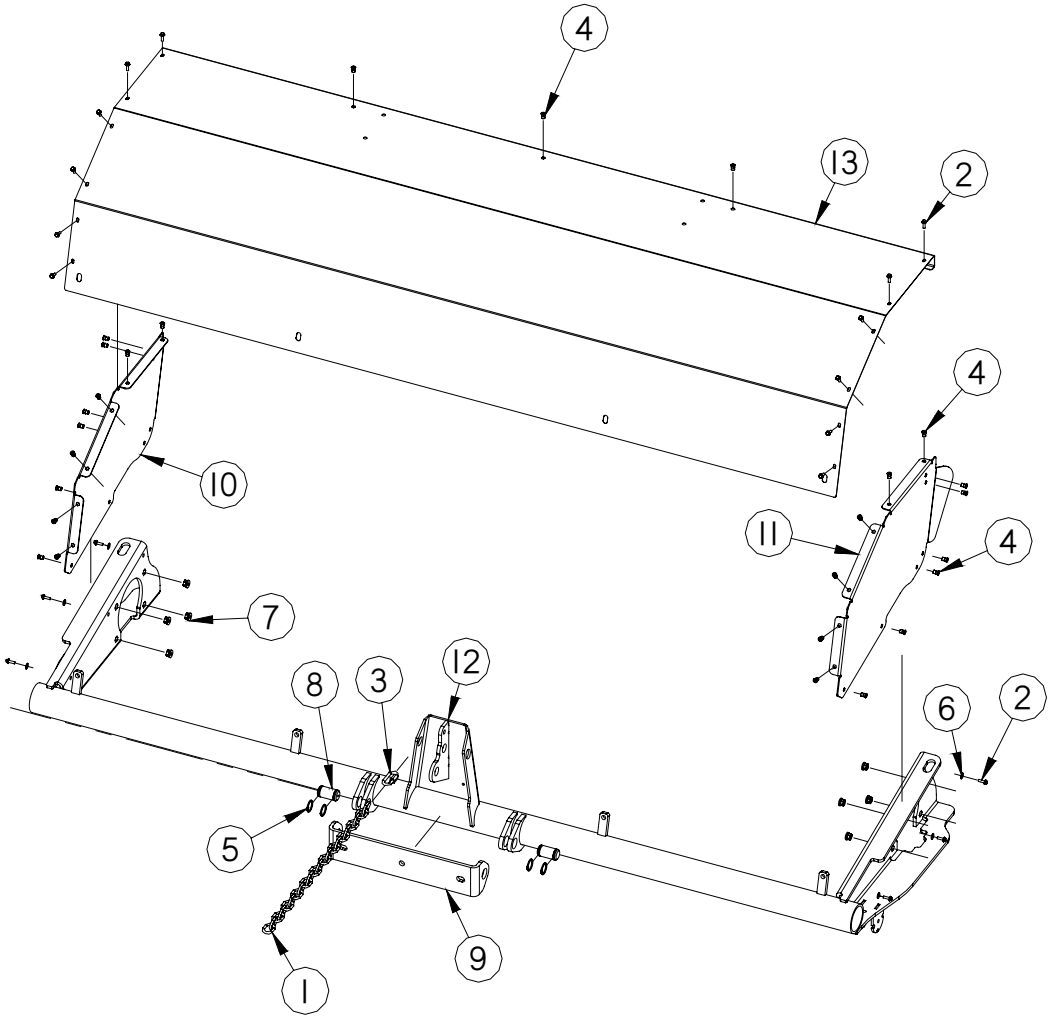

Item	Part	Qty	Description
1.	07-0249	1	Chain, 1/4 x 22
2.	07-2952	18	Screw, HFH, CL10.9, M6-11 x 20
3.	07-3311	1	Link, Quick, 5/16
4.	07-3617	27	Nut, Insert, M6 x 1
5.	07-3842	4	Ring, Snap
6.	07-4927	6	Washer, Fender, CL8.8, M6
7.	07-6056	8	Nut, Flange, M10-15
8.	13-10004	2	Pin, Pivot, Left Arm, QA
9.	13-12617	1	Plate, Mounting, Brush Head, Pivot
10.	13-13047	1	Sheet, Hood, Side, Left
11.	13-13048	1	Sheet, Hood, Side, Right
12.	13-13280	1	Weld, Brush Frame, 8 Ft
	13-13594	1	Weld, Brush Frame, 9 Ft
13.	13-13283	1	Sheet, Hood, 8 Ft
	13-13595	1	Sheet, Hood, 9 Ft

Core Assemblies

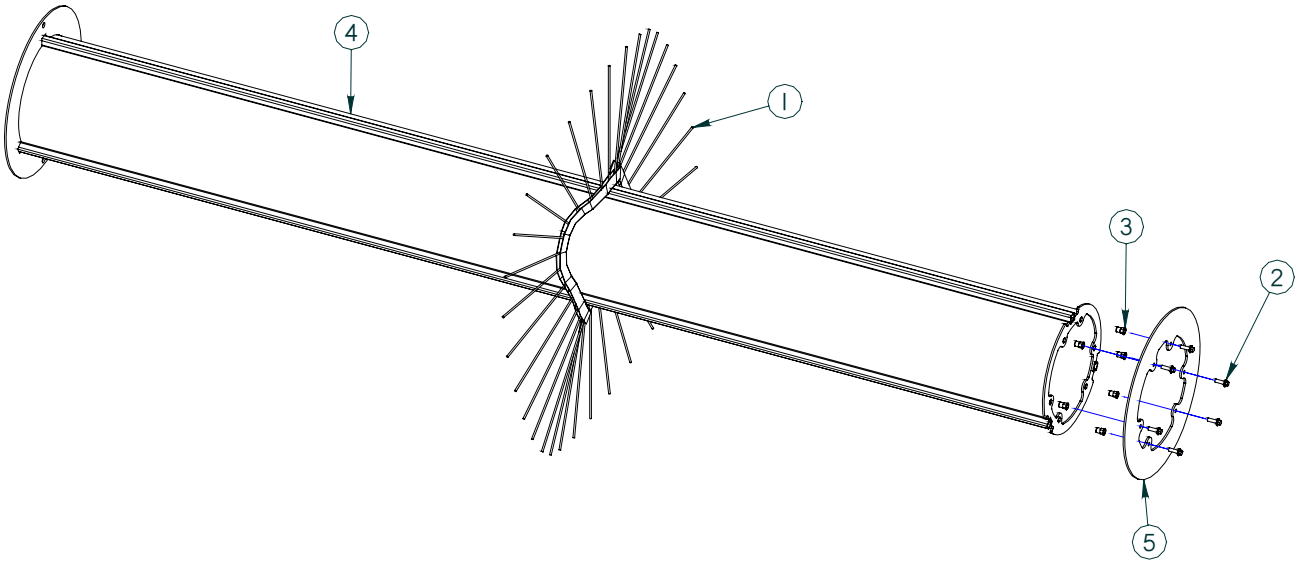

Item	Part	Qty	Description
1.	01-0933	1	Section, Set, 32, 10, Mixed, Convoluted (8 Ft)
	01-9319	1	Section, Set, 32, 10, Mixed, Convoluted (9 Ft)
	01-0080C	1	Section, Set, 32, Poly, Convoluted (8 Ft)
	01-0530C	1	Section, Set, 32, Poly, Convoluted (9 Ft)
2.	07-2952	6	Screw, HFH, CL10.9, M6-11 x 20
3.	07-3617	6	Nut, Insert, M6 x 1
4.	13-13286	1	Weld, Core, 8 Ft, Hex Drive
	13-13596	1	Weld, Core, 9 Ft, Hex Drive
5.	13-13166	1	Plate, Ring, Core, End, QC

Shaft Assembly

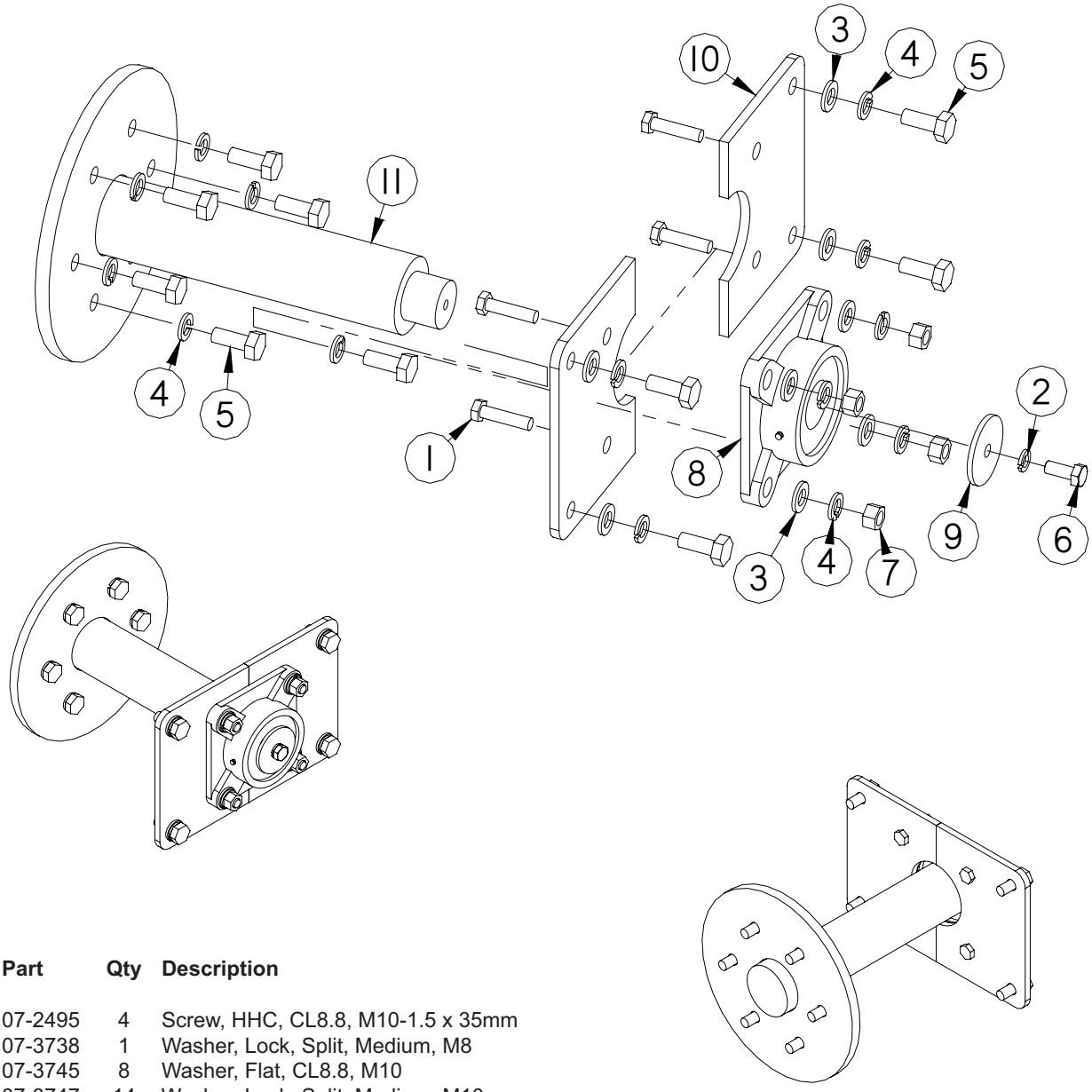

Item	Part	Qty	Description
1.	07-2495	4	Screw, HHC, CL8.8, M10-1.5 x 35mm
2.	07-3738	1	Washer, Lock, Split, Medium, M8
3.	07-3745	8	Washer, Flat, CL8.8, M10
4.	07-3747	14	Washer, Lock, Split, Medium, M10
5.	07-3748	10	Screw, HHC, CL10.9, M10-1.5 x 30mm
6.	07-3777	1	Screw, HHC, CL10.9, M8-1.55 x 20mm
7.	07-4514	4	Nut, Hex, CL10, M10-1.5
8.	08-0067	1	Bearing, 1 1/4, 4 Bolt
9.	13-11903	1	Washer, .34 x 1.8 x 10Ga
10.	13-12941	2	Plate, Shaft, Brush Frame, Mounting
11.	13-12974	1	Weld, Shaft, Hex Drive

Hydraulic Assemblies - Dual Motor

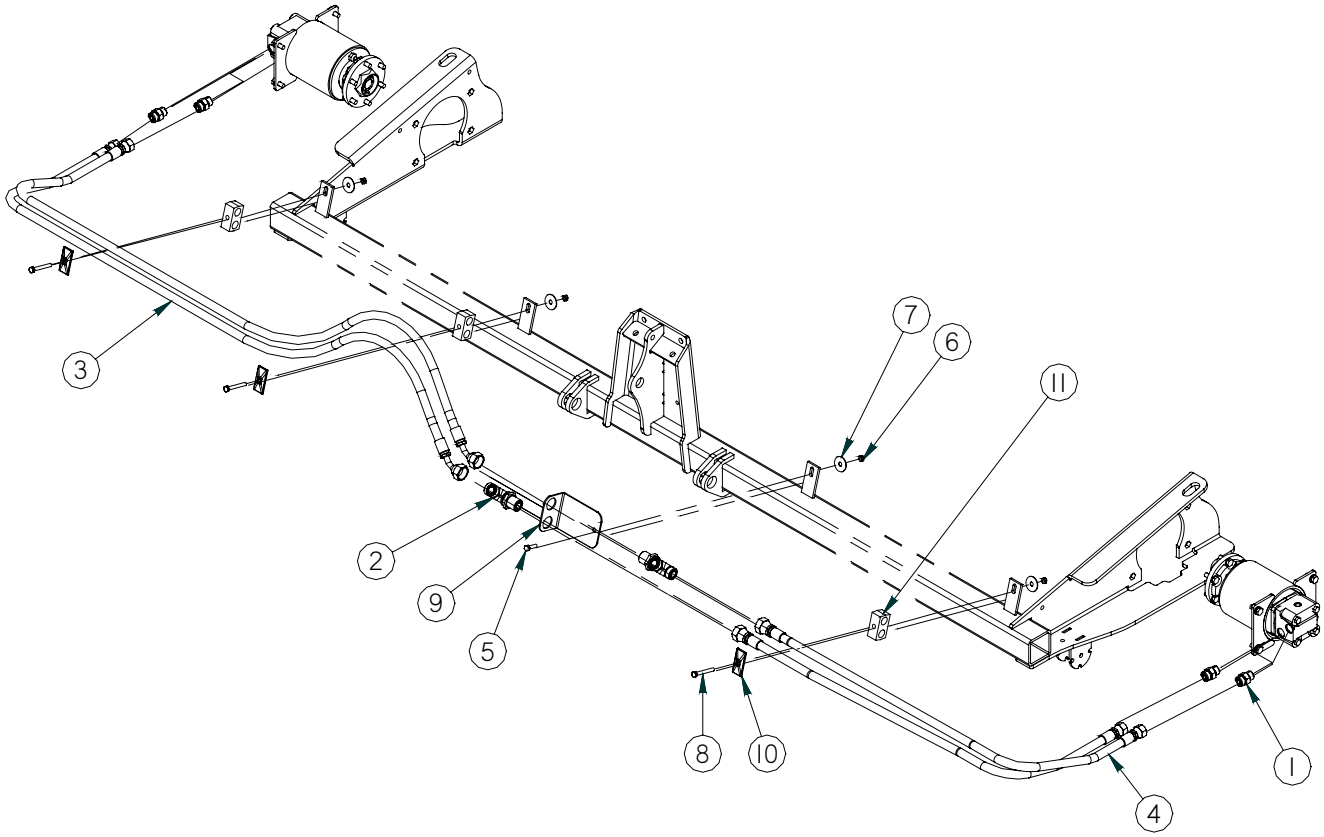

Item	Part	Qty	Description
1.	03-1939	4	Fitting, Adaptor, HP, 7/8MOR, 5/8MFS
2.	03-5160	2	Fitting, Tee, Run, HP, 12MFS, All Sides
3.	03-5164	2	Hose, 1/2 x 86, 10FFS, 12FFS45, SAE 100R2 (8 ft)
	03-5178	2	Hose, 1/2 x 92, 10FFS, 12FFS45, SAE 100R2 (9 ft)
4.	03-5168	2	Hose, 1/2 x 50, 10FFS, 12FFS, SAE 100R2 (8 ft)
	03-5179	2	Hose, 1/2 x 56, 10FFS, 12FFS, SAE 100R2 (9 ft)
5.	07-3740	1	Screw, HHC, CL10.9, M8-1.25 x 30mm
6.	07-4604	4	Nut, Hex, Lock, M8-1.25, CL10.9
7.	07-4942	4	Washer, Fender, 1 1/2 x 5/16
8.	07-5287	3	Screw, HHC, CL10.9, M8-1.25 x 65mm
9.	13-15094	1	Bracket, Mounting, Bulkhead Tees, Dual
10.	RHW8614	3	Cover, Plate
11.	RHW8616	3	Hose, Cradle

Hydraulic Assemblies - Single Motor

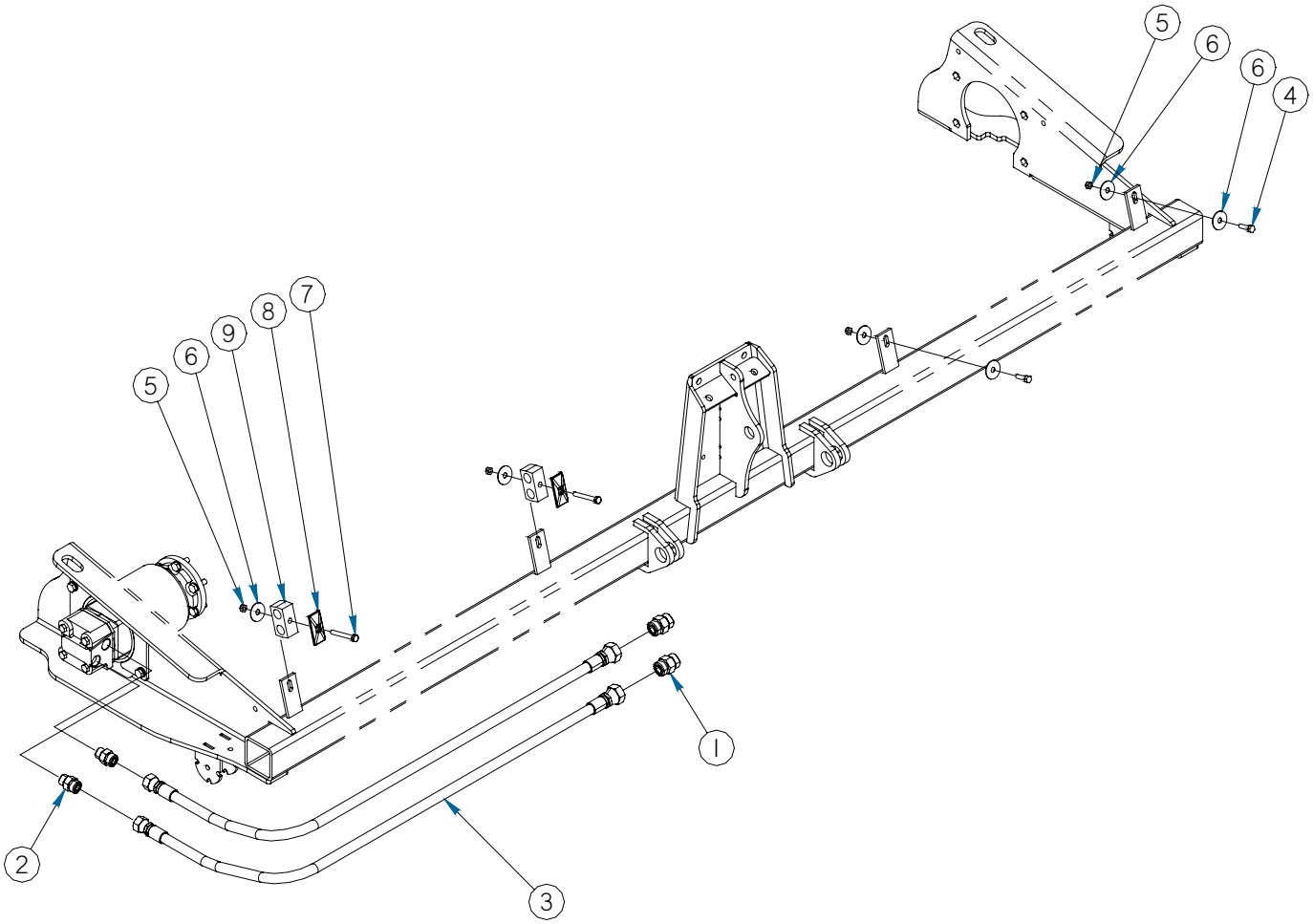

Item	Part	Qty	Description
1.	03-1920	2	Fitting, Union, HP, 3/4MFS, 3/4MFS
2.	03-1939	2	Fitting, Adaptor, HP, 7/8MOR, 5/8MFS
3.	03-5168	2	Hose, 1/2 x 50, 10FFS, 12FFS, SAE 100R2 (8 ft)
	03-5179	2	Hose, 1/2 x 56, 10FFS, 12FFS, SAE 100R2 (9 ft)
4.	07-3740	2	Screw, HHC, CL10.9, M8-1.25 x 30mm
5.	07-4604	4	Nut, Hex, Lock, CL10.9, M8-1.25
6.	07-4942	6	Washer, Fender, 1 1/2 x 5/16
7.	07-5287	2	Screw, HHC, CL10.9, M8-1.25 x 65mm
8.	RHW8614	2	Cover, Plate
9.	RHW8616	2	Hose, Cradle

Motor Bucket Assemblies

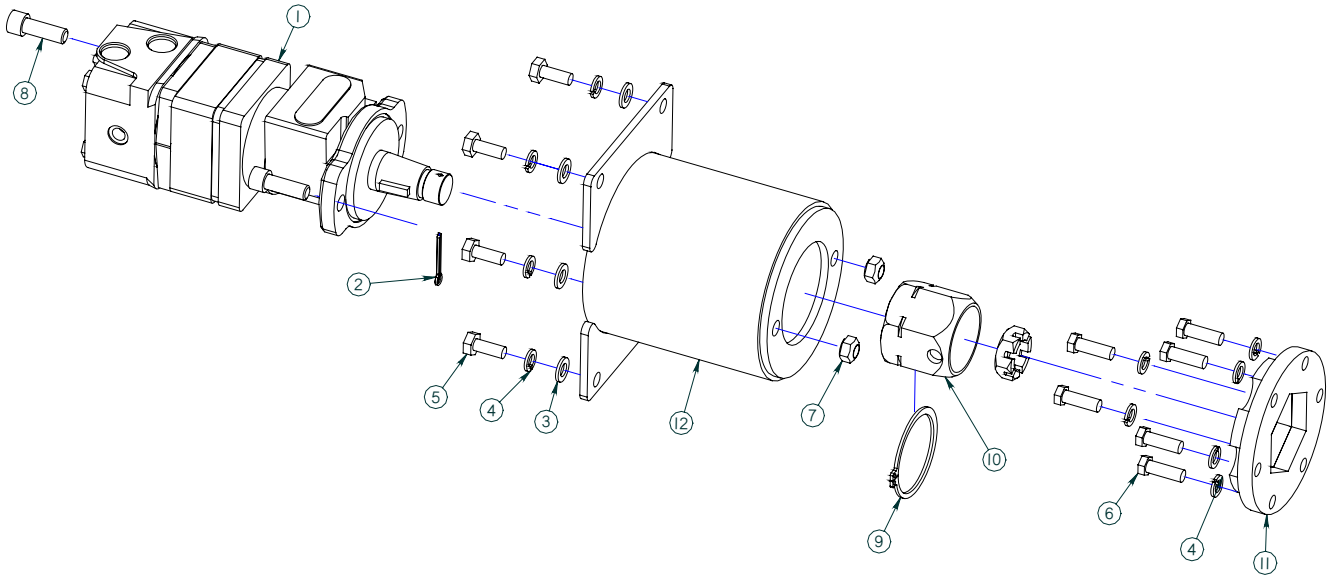

Item	Part	Qty	Description
1.	03-4682	1	Motor, Hydraulic, White, 17.9 Cu In, with Check Valve, Right (Dual Motor)
	03-4634	1	Motor, Hydraulic, White, 17.9 Cu In, with Check Valve, Left (Dual Motor)
	03-4425	1	Motor, Hydraulic, White, 24.9 Cu In, with Check Valve, Left (Single Motor)
2.	07-1044	1	Pin, Center, Gr2, 5/32 x 1 1/2
3.	07-3745	4	Washer, Flat, CL8.8, M10
4.	07-3747	10	Washer, Lock, Split, Medium, M10
5.	07-3748	4	Screw, HHC, CL10.9, M10-1.5 x 25mm
6.	07-3749	6	Screw, HHC, CL10.9, M10-1.5 x 30mm
7.	07-4610	2	Nut, Hex, Lock, CL10.9, M12-1.75
8.	07-5816	2	Screw, Socket Head, CL12.9, M12-1.75 x 35mm
9.	07-6196	1	Ring, Retaining, 2.75, Zinc Plated
10.	13-11890	1	Hub, Hex, 2 1/2 x 1 1/4, Tapered Bore
11.	13-12750	1	Weld, Hex, Plate, with Doubler
12.	13-12946	1	Weld, Motor Bucket

Brush Head Stands

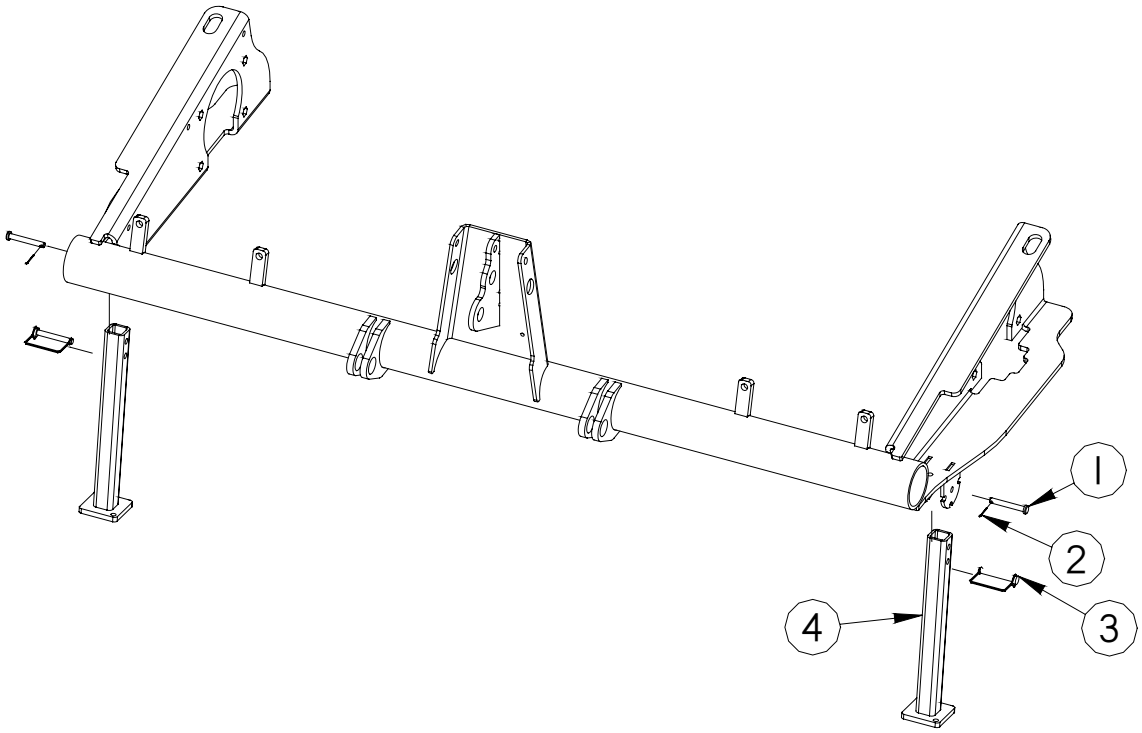

Item	Part	Qty	Description
1.	07-0260	2	Pin, Clevis, Gr2, 3/8 x 2 3/4
2.	07-0699	2	Pin, Cotter, Gr2, 1/8 x 1 1/4
3.	07-4748	2	Pin, Lock, 3/8 x 2, Grip, Square, 2.50AL
4.	13-13898	2	Weld, Stand, Brush Head, 211

Brush Head Labels

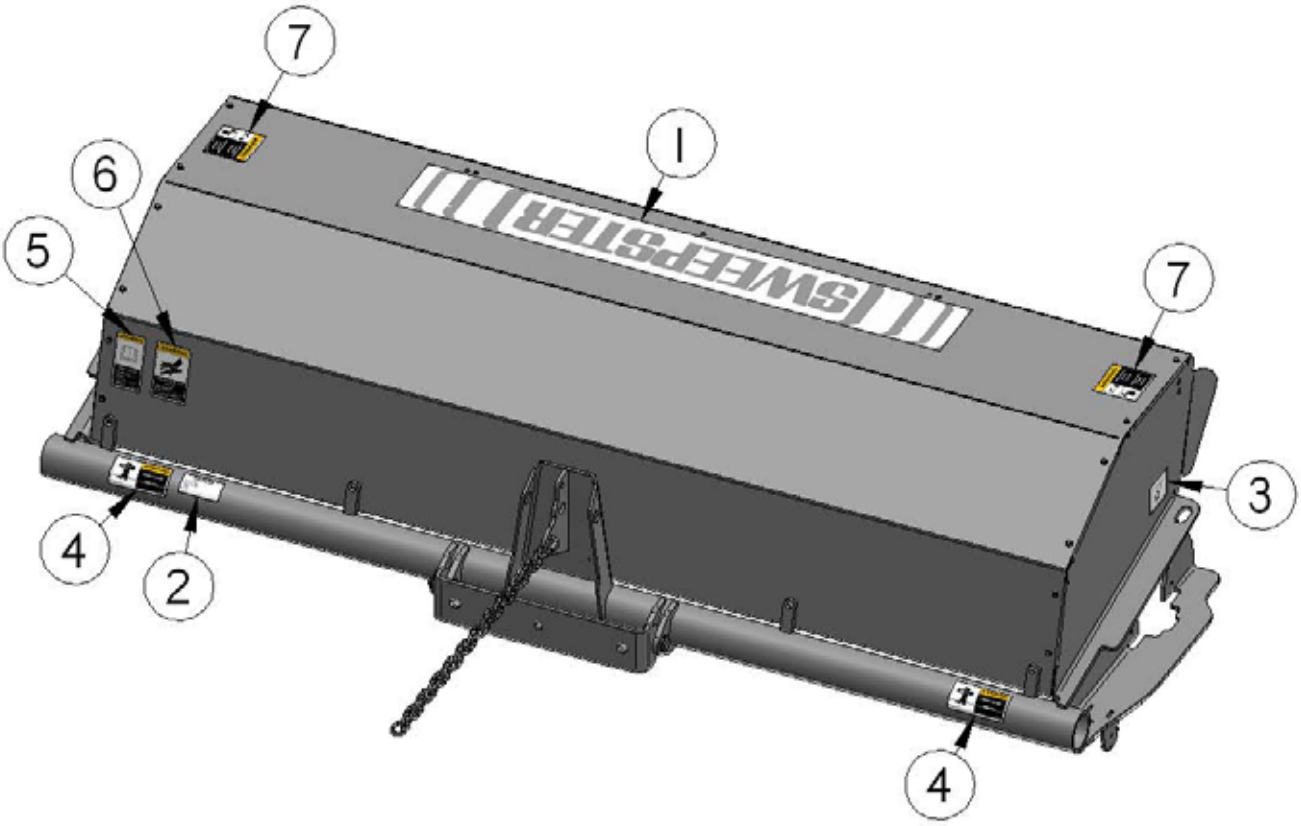

Item	Part	Qty	Description
1.	50-0252	1	Label, Logo, Large, White
2.	50-0634	1	Label, Serial Number
3.	50-0643	2	Label, Tie Down Point
4.	50-0721	2	Label, Warning, Crush Hazard
5.	50-0722	1	Label, Warning, Misuse Hazard
6.	50-0724	1	Label, Warning, High Pressure Fluid Hazard
7.	50-0726	2	Label, Warning, Flying Objects & Entanglement

Mounting/Swing Quick Attach

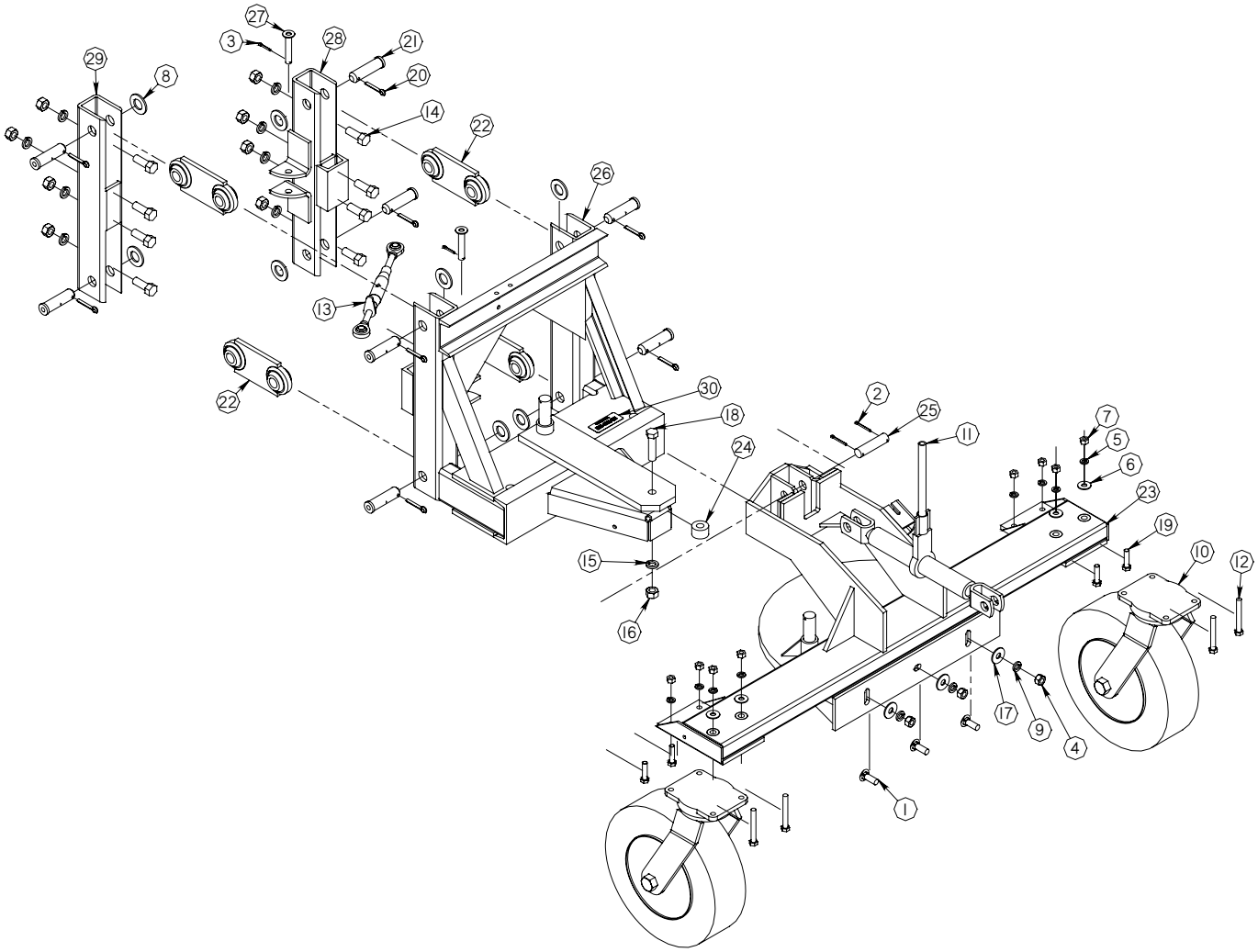

Item	Part	Qty	Description
1.	07-0119	3	Bolt, Carriage, Gr5, 5/8-11 x 1 3/4
2.	07-0206	2	Pin, Cotter, Gr2, 3/16 x 2
3.	07-0786	2	Pin, Cotter, Gr2, 3/16 x 1 1/2
4.	07-1294	3	Nut, Hex, Gr8, 5/8-11
5.	07-1762	8	Washer, Lock, Split, Medium, 1/2
6.	07-1763	4	Washer, Flat, Gr8, 1/2
7.	07-1764	8	Nut, Hex, Gr8, 1/2-13
8.	07-1841	8	Washer, Flat, Gr2, 1 1/8
9.	07-1872	3	Washer, Lock, Split, Medium, 5/8
10.	07-1977	2	Assembly, Caster, 4.80-8, 4 Ply
11.	07-2104	1	Toplink, Ratchet
12.	07-2360	4	Screw, HHC, Gr8, 1/2-13 x 4
13.	07-2484	1	Toplink, 5/8 Balls
14.	07-3064	8	Screw, HHC, Gr8, 3/4-10 x 2
15.	07-3065	9	Washer, Lock, Split, Medium, 3/4
16.	07-3066	9	Nut, Hex, Gr8, 3/4-10
17.	07-3120	3	Washer, Flat, Gr8, 5/8
18.	07-3544	1	Screw, HHC, Gr8, 3/4-10 x 3
19.	07-5075	4	Screw, HHC, Gr8, 1/2-13 x 2
20.	07-5355	8	Pin, Cotter, 5/16 x 2
21.	12-0292	8	Pin, Hitch, 1.122 x 4
22.	12-4152	4	Weld, Link, Hitch, 6.25
23.	13-2218	1	Weld, Plate, Swing
24.	13-2230	1	Bushing, 1 3/4 x 25/32 x 1 1/16
25.	13-2484	1	Pin, 1 x 4, with Holes
26.	13-3134	1	Weld, Frame, Swing
27.	13-3413	2	Weld, Pin, Mounting, 5/8 x 3 1/2
28.	13-4386	1	Weld, Bracket, Lift, Left
29.	13-4387	1	Tube, Bracket, Lift
30.	50-0249	1	Label, Plate, Part Number

Manual Angle

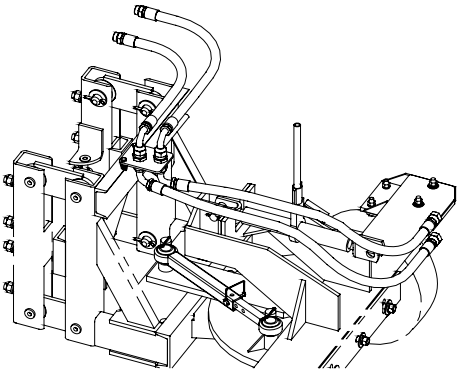

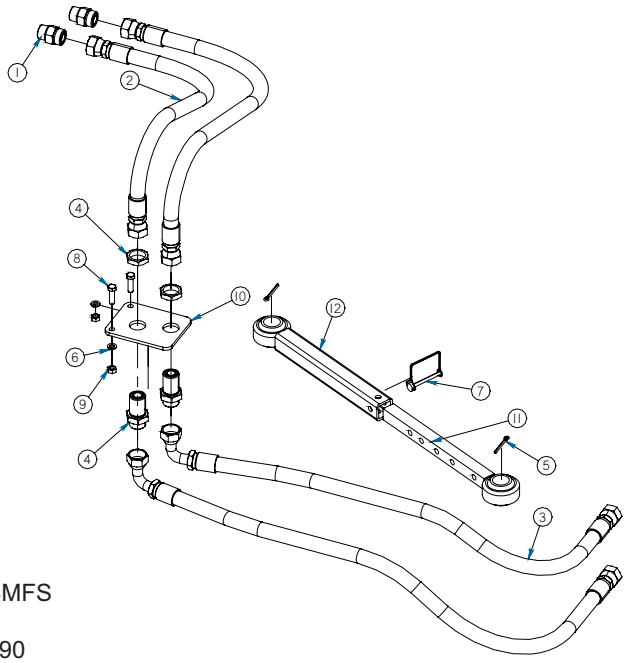

Item	Part	Qty	Description
1.	03-1945	2	Fitting, Adapter, HP, 1 1/16MOR, 3/4MFS
2.	03-3763	2	Hose, 3/4 x 91, TC, 3/4FFS, 3/4FFS
3.	03-4314	2	Hose, 3/4 x 65, TC, 3/4FFS, 3/4FFS90
4.	03-9539	2	Fitting, Bulkhead, 12MFS, 12MFS
5.	07-0206	2	Pin, Cotter, Gr2, 3/16 x 2
6.	07-1718	2	Washer, :Lock, Split, Medium, 3/8
7.	07-2105	1	Pin, Lock, 3/8 Square Bail
8.	07-2116	2	Screw, HHC, Gr8, 3/8-16 x 1 1/4
9.	07-3654	2	Nut, Hex, Gr8, 3/8-16
10.	13-10046	1	Plate, Mounting, Fittings
11.	13-2452	1	Weld, Link, Inner
12.	13-2453	1	Weld, Link, Outer

11-5972 Manual Angle Link Kit

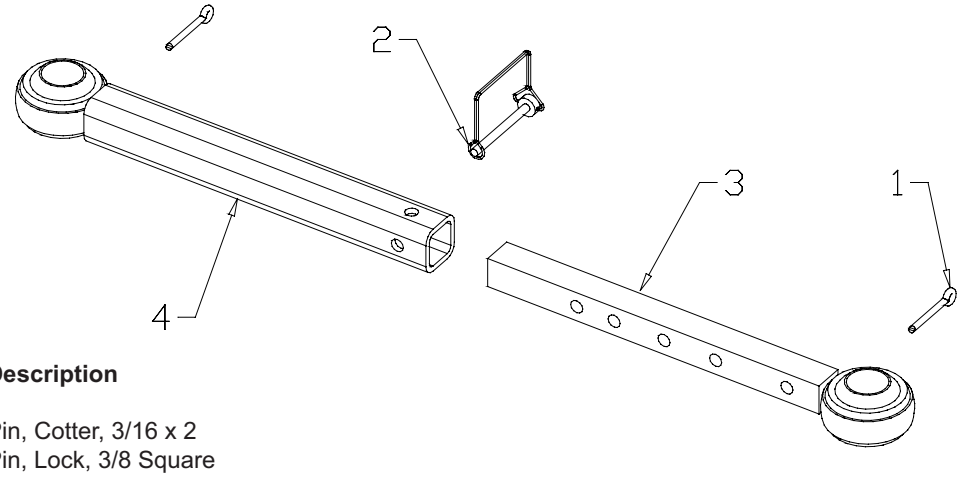

Item	Part	Qty	Description
1.	07-0206	2	Pin, Cotter, 3/16 x 2
2.	07-2105	1	Pin, Lock, 3/8 Square
3.	13-2452	1	Weld, Link, Inner
4.	13-2453	1	Weld, Link, Outer

Hydraulic Angle with Electric Valves

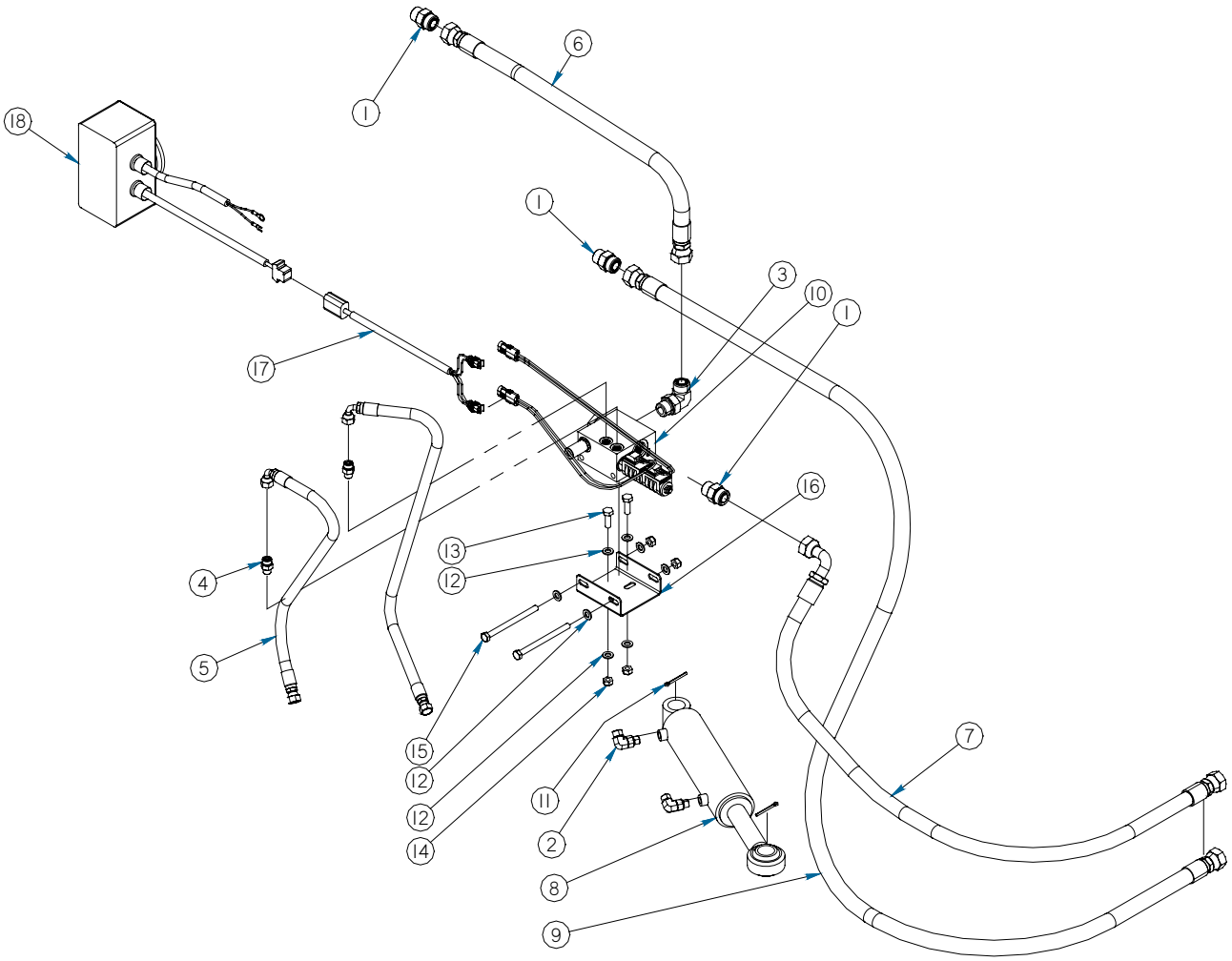

Item	Part	Qty	Description
1.	03-1945	3	Fitting, Adapter, HP, 1 1/16MOR, 3/4MFS
2.	03-2092	2	Fitting, Elbow, HP, 90°, 9/16MOR, 3/8MFS
3.	03-2177	1	Fitting, Elbow, HP, 90°, 3/4MFS, 1 1/16MOR
4.	03-2291	2	Fitting, Adapter, HP, 3/8MFS, 9/16MOR
5.	03-2352	2	Hose, 3/8 x 32, 2W, 3/8FFS90, 3/8FFS
6.	03-3763	1	Hose, 3/4 x 91, TC, 3/4FFS, 3/4FFS
7.	03-4314	1	Hose, 3/4 x 65, TC, 3/4FFS, 3/4FFS90
8.	03-4887	1	Cylinder, Hydraulic, 2 1/2 Bore, 7 1/2 Stroke
9.	03-4923	1	Hose, 3/4 x 156, TC, 3/4FFS, 3/4FFS
10.	03-5215	1	Manifold, Swing, with Relief, 12 Volt
11.	07-0206	2	Pin, Cotter, Gr2, 3/16 x 2
12.	07-3745	8	Washer, Flat, CL8.8, M10
13.	07-3749	2	Screw, HHC, CL10.9, M10-1.5 x 30mm
14.	07-4622	4	Nut, Hex, Lock, CL10.9, M10-1.5
15.	07-7028	2	Screw, HHC, CL10.9, M10-1.5 x 130mm
16.	13-15085	1	Plate, Mounting, Valve
17.	LAF9441	1	Assembly, Wire, 9 Ft
18.	LAF9444	1	Wire, Harness, with Box

Options Section

QC Series Angle Brooms

Table of Contents

Dirt Deflector Kits

28-9721 8 Ft
28-9750 9 Ft

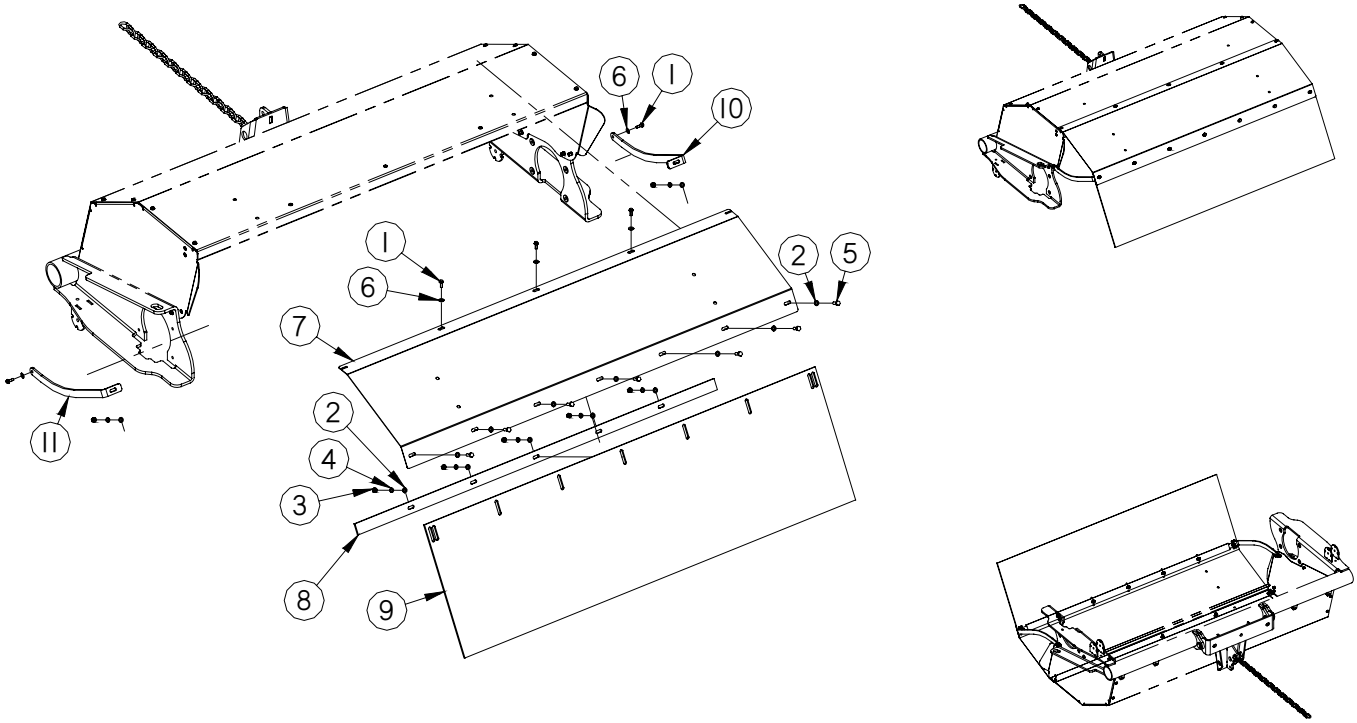

Item	Part	Qty	Description
1.	07-2952	5	Screw, HFH, CL10.9, M6-1 x 20
2.	07-3736	18	Washer, Flat, CL8.8, M8
3.	07-3737	9	Nut, Hex, CL10, M8-1.25
4.	07-3738	9	Washer, Lock, Split, Medium, M8
5.	07-3739	9	Screw, HHC, CL10.9, M8-1.25 x 25mm
6.	07-4927	5	Washer, Fender, CL8.8, M6
7.	13-12510	1	Plate, Dirt Defector, 8 Ft
	13-13599	1	Plate, Dirt Defector, 9 Ft
8.	13-12509	1	Plate Retainer, Dirt Deflector, 8 Ft
	13-13598	1	Plate Retainer, Dirt Deflector, 9 Ft
9.	13-13301	1	Flap, Neoprene, Dirt Deflector, 8 Ft
	13-13600	1	Flap, Neoprene, Dirt Deflector, 9 Ft
10.	13-13415	1	Bracket, Deflector, Left
11.	13-13416	1	Bracket, Deflector, Right

180° Hood Kits

28-9725 8 Ft
28-9748 9 Ft

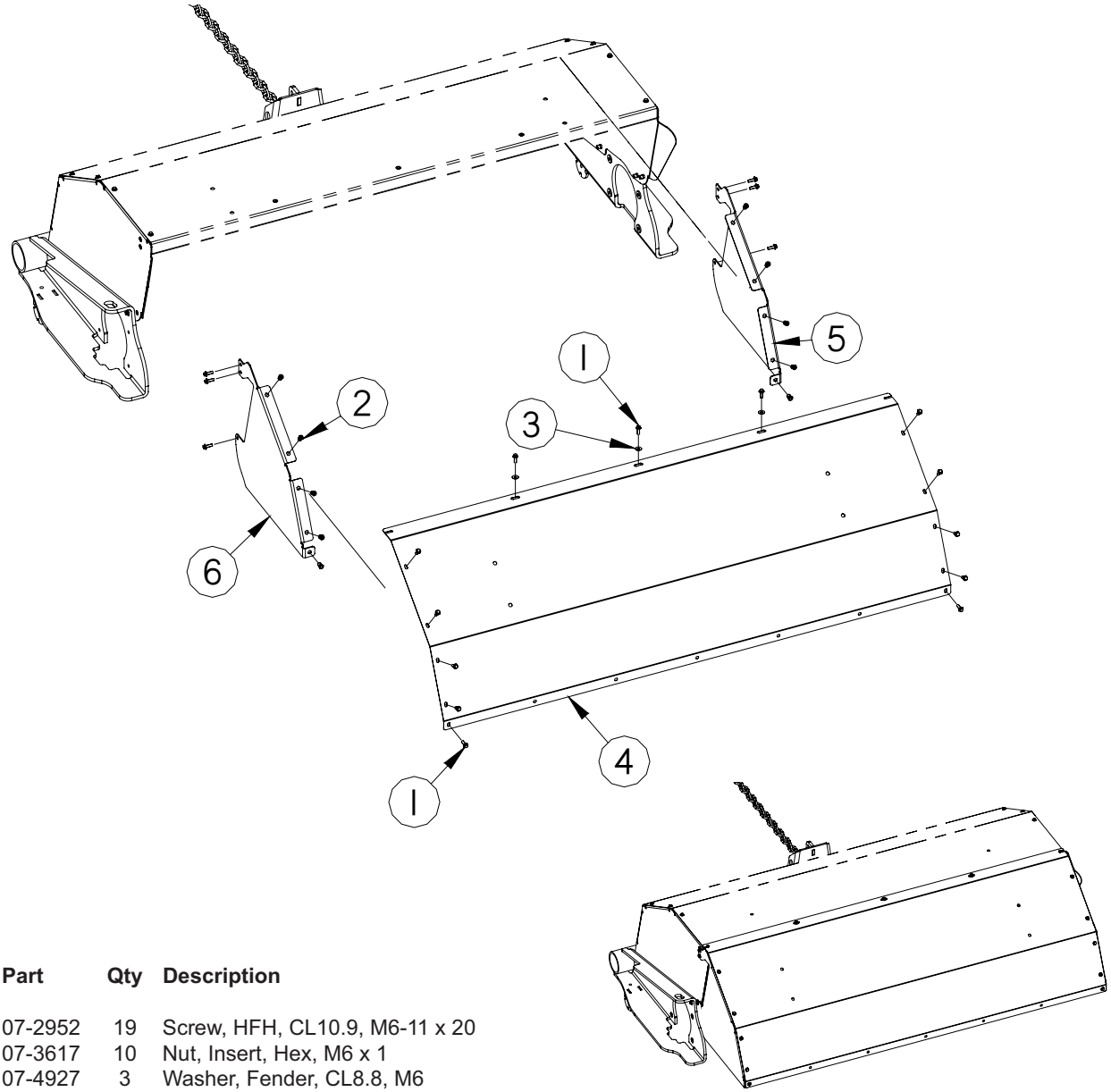

Item	Part	Qty	Description
1.	07-2952	19	Screw, HFH, CL10.9, M6-11 x 20
2.	07-3617	10	Nut, Insert, Hex, M6 x 1
3.	07-4927	3	Washer, Fender, CL8.8, M6
4.	13-12397	1	Plate, Hood, 180° 8 Ft
	13-13597	1	Plate, Hood, 180° 9 Ft
5.	13-13417	1	Plate, Side, Left, Hood
6.	13-13418	1	Plate, Side, Right, Hood

Sprinkler System

Item	Part	Qty	Description
1.	03-0076	1	Fitting, Nipple, BP, Close, 3/8
2.	03-0457	1	Fitting, Barb, Nylon, 3/8-3/8MP
3.	03-0819	2	Fitting, Reducer, Bushing, BP, 1/2-3/8
4.	03-1326	1	Pump, Flojet, Water, 2.9 gpm, 12 volt
	03-2558		Pump, Flojet, Water, 2.9 gpm, 24 volt
5.	03-1709	2	Fitting, Barb, Nylon, 5/8-3/8MP
6.	07-0343	1	Switch, Toggle, 2 Position
7.	07-0411	5	Nozzle, Tee, with Clamp
8.	07-0412	2	Nozzle, Elbow, with Clamp
9.	07-0413	7	Nozzle, Cap, Nylon
10.	07-0414	6	Nozzle, Tip, Brass
11.	07-0417	1	Fitting, Barb, Brass, 3/8
12.	07-0532	1	Strainer, Hypro, Water
13.	07-0547	2	Clamp, Spring, 7/8 Hose
14.	07-0549	14	Clamp, Spring, 5/8 Hose
15.	07-0867	4	Terminal, Butt
16.	07-0917	20ft	Wire, Bulk, Cord, 16 Gauge
17.	07-0929	1	Terminal, Ring, 3/8, 16-14
18.	07-1716	4	Bolt, Carriage, 3/8-16 x 1
19.	07-1718	4	Washer, Lock, Split, 3/8
20.	07-3279	4	Washer, Flat, 3/8
21.	07-3638	4	Screw, Cap, 1/4-20 x 1 1/4
22.	07-3654	4	Nut, Hex, 3/8-16
23.	07-4032	4	Washer, Flat, 1/4
24.	07-4038	4	Washer, Lock, Split, 1/4
25.	07-4039	4	Nut, Hex, 1/4-20
26.	07-4673	2	U-Bolt, Standard, 1/4-20 x 1
28.	09-0028	10ft	Hose, Heater, 5/8(8)
	09-0028	7ft	Hose, Heater, 5/8 (9)
29.	09-0056	27.5ft	Hose, Heater, 3/8 (8)
	09-0056	28.75ft	Hose, Heater, 3/8 (9)
32.	13-2812	1	Tube, RD, 7/8 x 16 Gauge x 92.37 (8)
	13-2802	1	Tube, RD, 7/8 x 16 Gauge x 104 (9)
33.	13-10076	2	Plate, Mounting, Sprinkler Bar, Adjustment

Sprinkler System

12 Volt
11-4062 (8 Ft)
11-4262 (9 Ft)

24 Volt
11-4379 (8/9 Ft)

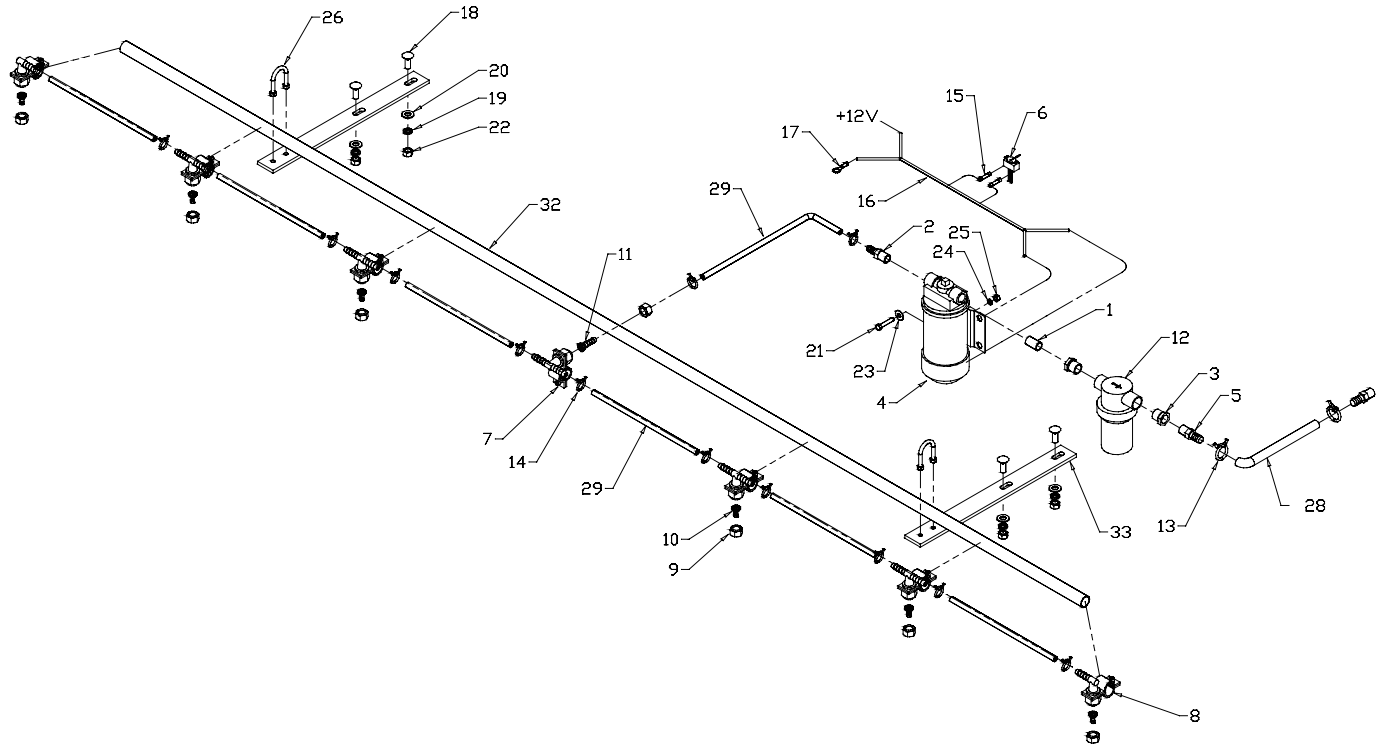

Sight Indicators

Kit: 28-9965

Item	Part	Qty	Description
1.	07-3279	2	Washer, Flat, Gr8, 3/8
2.	07-4036	2	Nut, Hex, Nylock, 3/8-16
3.	07-6597	4	Screw, HFH, CL10.9, M6-1 x 30
4.	13-14857	2	Weld, Sight Indicator
5.	13-9567	2	Ball, 2 1/8, Red, with Hole

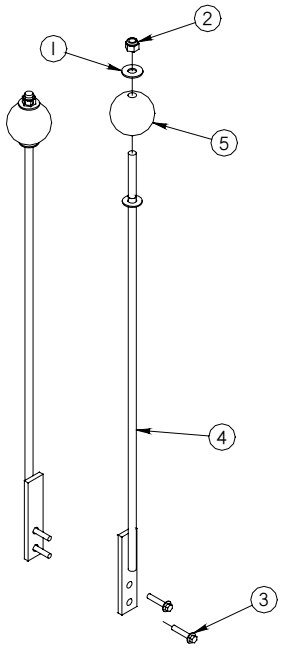

Kit: 11-5897

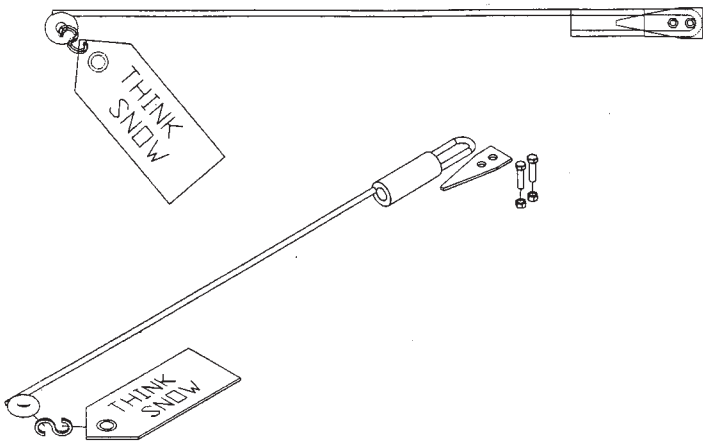

Appendix

QC Series Angle Brooms

Table of Contents

APPENDIX
TORQUE SPECS.

Bolt Torque Specifications

Body Size Grade 5	Ft-lbs		Body Size Class 8.8	Ft-lbs
1/4 - 20	6 ± 1		M6 – 1.0	5 ± 1
- 28	7 ± 1		n/a	-
5/16 – 18	13 ± 3		n/a	-
- 24	14 ± 3		n/a	-
3/8 – 16	23 ± 5		M8 –1.25	14 ± 3
– 24	26 ± 5		–1.0	-
7/16 – 14	37 ± 8		M10 – 1.5	29 ± 6
– 20	41 ± 9		- 0.75	-
1/2 - 13	56 ± 11		M12 – 1.75	50 ± 10
- 20	63 ± 12		- 1.0	-
9/16 – 12	82 ± 14		M14 – 2.0	80 ± 14
- 18	91 ± 16		- 1.5	-
5/8 – 11	113 ± 20		M16 – 2.0	125 ± 22
- 18	127 ± 23		- 1.5	-
3/4 - 10	201 ± 26		n/a	-
- 16	223 ± 29		n/a	-
7/8 – 9	321 ± 41		M20 – 2.5	244 ± 31
- 14	355 ± 46		- 1.5	-
1 – 8	483 ± 62		M24 – 3.0	422 ± 54
- 12	528 ± 68		- 2.0	-

Body Size Grade 8	Ft-lbs		Body Size Class 10.9	Ft-lbs
1/4 - 20	9 ± 2		M6 – 1.0	8 ± 1
- 28	10 ± 2		n/a	-
5/16 – 18	18 ± 4		n/a	-
- 24	20 ± 4		n/a	-
3/8 – 16	32 ± 7		M8 –1.25	20 ± 4
– 24	37 ± 8		–1.0	-
7/16 – 14	52 ± 11		M10 – 1.5	40 ± 8
– 20	58 ± 12		- 0.75	-
1/2 - 13	80 ± 16		M12 – 1.75	69 ± 14
- 20	90 ± 18		- 1.0	-
9/16 – 12	115 ± 20		M14 – 2.0	110 ± 20
- 18	128 ± 23		- 1.5	-
5/8 – 11	159 ± 28		M16 – 2.0	173 ± 31
- 18	180 ± 32		- 1.5	-
3/4 - 10	282 ± 36		n/a	-
- 16	315 ± 41		n/a	-
7/8 – 9	454 ± 59		M20 – 2.5	337 ± 44
- 14	500 ± 65		- 1.5	-
1 – 8	681 ± 88		M24 – 3.0	583 ± 75
- 12	746 ± 97		- 2.0	-

Foot-pounds may be converted to Newton Meters by multiplying by 1.35582
Foot-pounds may be converted to Inch-pounds by multiplying by 12.
If the nut and screw are not the same grade, the lower grade will always be used.

NOTE - Nylock nuts are utilized when greater resistance to vibrating loose is required, and greater operating temperatures are not a factor. In addition, like lock nuts, nylock nuts have a safety feature that if the bolt does vibrate loose, the nut will remain on the screw. Install nylock nuts to the standard torque shown above.

Hydraulic Torque Specifications

Face Seal: Assembly, Tube to Fitting

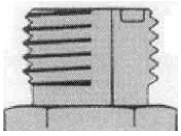

Note - Face seal fittings have the most reliable sealing method and therefore, should be used whenever possible.

Installation

1. Make sure threads and sealing surfaces are free of burrs, nicks, scratches, or any foreign materials.
2. Install proper SAE o-ring to end of fitting if not already installed. Ensure o-ring is fully seated and retained properly.
3. Lubricate o-ring with a light coating of clean hydraulic oil.
4. Position tube and nut squarely on face seal of fitting and tighten nut finger tight.
5. Using appropriate torquing device, tighten to given torque rating from the table below.

Torque Values:

SAE Dash Size	Tube Side Thread Size	In-lbs	Ft-lbs
-4	9/16 - 18	220 ± 10	18 ± 1
-6	11/16 - 16	320 ± 25	27 ± 2
-8	13/16 - 16	480 ± 25	40 ± 2
-10	1- 14	750 ± 35	63 ± 3
-12	1 3/16 - 12	1080 ± 45	90 ± 4
-16	1 7/16 - 12	1440 ± 90	120 ± 8
-20	1 11/6 - 12	1680 ± 90	140 ± 8
-24	2 - 12	1980 ± 100	165 ± 8

NOTE - ft-lb may be converted to Newton Meters by multiplying by 1.35582.
NOTE - in-lbs may be converted to Newton Meters by multiplying by 0.11298.

APPENDIX
TORQUE SPECS.

Hydraulic Torque Specifications

Straight Thread O-ring Fitting: Assembly, Fitting to Port

NOTE - Straight thread o-ring fittings are utilized to adapt hydraulic systems to motors, pumps, cylinders, and valves.

Installation (Adjustable Fitting)

1. Make sure threads and sealing surfaces are free of burrs, nicks, scratches, or any foreign materials.
2. Install proper SAE o-ring on port end of fitting if not already installed. Ensure o-ring is fully seated and retained properly.
3. Lubricate o-ring with a light coating of clean hydraulic oil.
4. Back off nut as far as possible and push washer up as far as possible. (Figure 4 & 5)
5. Screw fitting into port. Hand tighten fitting until backup washer contacts face of port. (Figure 6)
6. To position the fitting, unscrew to desired position, but not more than one full turn.
7. Hold fitting in position with wrench. Using appropriate torquing device, tighten nut to given torque rating from the table in section. (Figure 7)

Torque Values

Fitting Size	SAE Port Thread Size	In-Lbs	Ft-Lbs
-4	7/16 - 20	190 ± 10	16 ± 1
-6	9/16 - 18	420 ± 15	35 ± 1
-8	3/4 - 14	720 ± 25	60 ± 2
-10	7/8 - 14	1260 ± 50	105 ± 5
-12	1 1/16 - 12	1680 ± 75	140 ± 6
-16	1 5/16 - 12	2520 ± 100	210 ± 8
-20	1 5/8 - 12	3100 ± 150	260 ± 12
-24	1 7/8 - 12	3800 ± 150	315 ± 12

Figures 4, 5, 6 and 7

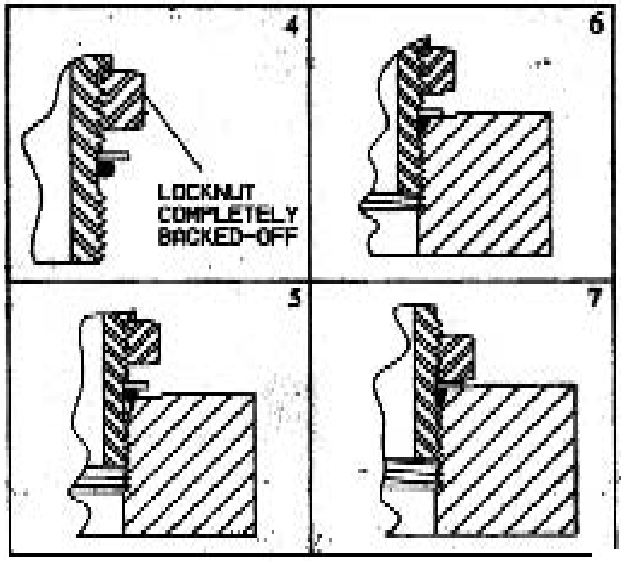

NOTE - ft-lb may be converted to Newton Meters by multiplying by 1.35582.
NOTE - in-lbs may be converted to Newton Meters by multiplying by 0.11298.

angle or angle assembly - portion of the sweeper that allows the brush head assembly to angle.

BP - black pipe.

brush head assembly - assembly that includes the core, hood, and brush frame.

brush pattern - area of dirt removed from sweeping surface; with a properly adjusted sweeper; the pattern is the same width for the entire length.

castellated - having battlements like a castle.

caution - indicates a potentially hazardous situation which, if not avoided, may result in minor or moderate injury.

core - weldment that holds brush sections.

danger - indicates an imminently hazardous situation which, if not avoided, will result in death or serious injury.

F - female.

FS - face seal.

front - side that is in front when facing the normal forward direction of travel of the machine.

gpm - gallons per minute.

HP - high pressure.

hood - brush shield.

hydraulic angle kit - means of swinging an assembly hydraulically.

important - used for instructions when machine damage may be involved.

in. - inches.

kph - kilometers per hour.

lb - pounds.

left-hand - side that is on the left when facing the normal forward direction of travel of the machine.

lift cylinder - means of raising the brush head assembly hydraulically.

lps - liters per second.

M - male.

mm - millimeters.

mph - miles per hour.

manual angle kit - means of swinging the brush head assembly mechanically.

mid pump unit - sweeper in which the pump is mounted on the mid PTO.

mounting assembly - portion of the sweeper that attaches to the prime mover; designed specifically for each prime mover.

NPT - national pipe thread.

note - indicates supplementary information.

OR - o-ring.

psi - pounds per square inch.

PTO - power take off; shaft on the prime mover used to drive attachments.

plate swing - swing assembly that includes a half-moon plate.

power pack - auxiliary hydraulic package used when prime mover hydraulics do not have enough flow available.

prime mover - refers to the tractor, truck, loader or other vehicle to which a sweeper is attached.

qty - quantity.

quick change core - core designed in a way that allows brush sections to be changed without removing hoses from motors.

rpm - revolutions per minute.

rear - side that is in rear when facing the normal forward direction of travel of the machine.

rear pump unit - sweeper in which the pump is mounted on a rear PTO.

retainer - removable plate or set of plates that keeps sections on the core.

right-handed - side that is on the right when facing the normal forward direction of travel of the machine.

section - single brush wafer.

section set - replacement brush wafers.

sprinkler system - system that sprays water ahead of the sweeper used to reduce dust.

sprinkler tank - assembly that includes the water reservoir and mounting used in a sprinkler system.

stands - devices designed to keep the components off the ground when the sweeper is dismounted.

swing or swing assembly - portion of the sweeper that allows the brush head assembly to angle.

swing cylinder - means of angling the brush head assembly hydraulically.

tank assembly, hydraulic - assembly that includes the hydraulic reservoir, filter and fittings; may also incorporate valves.

warning - indicates a potentially hazardous situation which, if not avoided, could result in death or serious injury.

weld - weldment.

windrow - pile of debris.

zerk - grease fitting.

Warranty Registration

Return form to 1-734-996-9014

SWEEPSTER
PALADIN LIGHT CONSTRUCTION

Warranty Registration Form and Delivery Inspection Report

IMPORTANT! Warranty Void if card is not returned with 10 days.
All Applicable sections must be filled in.

This section to be filled out and signed by Dealer at time of delivery.

Warranty Registration

Customer's Name _____
Address _____
City _____ State _____ Zip _____
Phone _____
Loader / Tractor Model _____
Delivery Date _____
Model or Part # _____
Serial # _____

Dealer's Name _____
Address _____
City _____ State _____ Zip _____
CHECK ONE:
Construction Use _____
Agricultural Use _____
Landscape Use _____
Other: _____

Dealer Inspection (check items applicable)

_____ All Decals installed (see operator's manual)
_____ Hydraulic fittings tight and free of leaks
_____ Fasteners tight
_____ Review Operating and Safety Instructions
_____ Guards and covers in place and secure
_____ Does Product Function Properly

I have thoroughly instructed the buyer on the above described equipment. This review included: The Operator's manual content, equipment care, adjustments, safe operation and applicable warranty policy.

Date _____ Dealer's Rep. signature _____

This section to be completed and signed by the customer

	1 Excellent	2 Good	3 Average	4 Unsatisfactory	5 Poor

QUALITY ASSURANCE RATING

Question:	Sweepster	Local Dealer
Quality of Product: Appearance	_____	
Construction	_____	
Quality of Service	_____	_____
Value (Priced Fairly)	_____	_____
Does it perform as claimed	_____	

The above described equipment and Operator's Manual have been received by me and I have been thoroughly instructed as to care, adjustments, safe operation and applicable warranty policy.

Date: _____ Owner's signature _____

NOTE! Make one copy each for the dealer's and owner's records. Mail original to Sweepster.

Comments: _____

Sweepster, Inc
2800 N. Zeeb Rd.
Dexter, MI 48130-9499
800-456-7100
fax 734-996-9014

SWEEPSTER ATTACHMENTS LLC

Limited 12 Month Warranty

Thank you for purchasing a Sweepster Attachments, LLC. product. Warranty protection is valid only when this Warranty Registration is completed and signed by the customer and dealer, and mailed to Sweepster Attachments,LLC. I hearby acknowledge that I have received a copy of the owners Limited Warranty and I accept the terms therein.

For a period of 12 months from the date of delivery of product to the original user, Sweepster Attachments, LLC. warrants each product to be free from manufacturing defects, subject to the limitations contained in this policy.

This warranty does not apply to defect caused, in whole or in part, by unreasonable use while in the possession of the user, including, but not limited to: failure to properly set up product; failure to provide reasonable and necessary maintenance; normal wear; routine tune ups or adjustments; improper handling or accidents; operation at speed or load conditions contrary to published specification; improper or insufficient lubrication; improper storage. This warranty is also not a guarantee that performance of each product will meet the expectations of the purchaser.

Sweepster Attachments, LLC. shall not be liable for consequential damages of any kind, including, but not limited to: consequential labor costs or transportation charges in connection with the
replacement or repair of defective parts; lost time or expense which may have accrued because of said defects. In no event shall Sweepster Attachments, LLC.'s total liability hereunder exceed the product purchase price.

Sweepster Attachments, LLC. makes no warranty with respect to trade accessories or any component or accessory of the product which was not manufactured by Sweepster Attachments, LLC. including any purchased components of any kind. These are subject to the warranties of their respective manufacturers. The warranty will be considered void if the product or any part of the product is modified or repaired in any way not expressly authorized by Sweepster Attachments, LLC. or if closed components are disassembled prior to return. Closed components include, but are not limited to: gearboxes, hydraulic pumps, motors, cylinders, and actuators.

Our obligation under the warranty is expressly limited, at our option, to the replacement or repair at Sweepster Attachments, LLC or at a service facility designated by us, or such part or parts as inspection shall disclose to have been defective. We are not responsible for unauthorized repairs or replacements. Any implied or statutory warranties, including any warranty of merchantability or fitness for a particular purpose, are expressly limited to the duration of this written warranty. We make no other express or implied warranty, nor is anyone authorized to make any on our behalf. This warranty cannot be extended, broadened, or changed except in writing by an authorized officer of Sweepster Attachments, LLC.